City of Louisville | Department of Public Works
COLORADO ▪ SINCE 1878

9/23/2025

Prospective Bidders

RE: Louisville Water Treatment Plant – Request for Sludge Removal Quotes

The City of Louisville (City) is seeking quotes from qualified contractors for sludge hauling services for the 2025 calendar year. Services will include the removal, transport, and disposal of sludge from drying beds at the Howard Berry Water Treatment Plant (HBWTP) and lower pond at the Sid Copeland Water Treatment Plant (SCWTP). Work shall be completed no later than December 31st, 2025.

The City's Water Treatment Facilities are located at 7000 Marshall Road for the Howard Berry Plant and 1955 N. Washington St. for the Sid Copeland Plant. Services will be conducted during normal business hours: Monday through Friday from 7:00 am until 4:30 pm. No weekend or after hour services will be conducted unless previously approved.

- Quotes should include price per ton and any associated fees such as sample testing, fuel surcharges, etc.
- Quotes must include references from at least three projects with similar requirements that have been completed during the past five years. Include email address and phone number of client contact
- Quotes shall include pricing to assist the City with any permitting and regulatory requirements related to removal and transport of dried material.

Quotes should be prepared and submitted via email to gvenette@louisvilleco.gov. Quotes will be accepted until **2:00 PM Mountain Time on October 17th 2025**. Late quotes will not be accepted. No quotes may be withdrawn within a period of sixty (60) days after the quote deadline. Quotes shall be labeled "**City of Louisville – WTP Sludge Hauling RFQ"**:

Questions can be directed to:

Greg Venette
Utilities Superintendent
303-335-4790
GVenette@louisvilleco.gov

Quote Submission Schedule		
Event	Date	Time
Inquiry Deadline	10/10/2024	5:00 pm
Final Response to Inquiries	10/14/2024	5:00 pm
RFQ's Due	10/17/2024	2:00 pm

Additional Information:

1. Available Drawings for the Howard Berry Water Treatment Plant drying beds have been uploaded to give contractors a sense of volume of sludge that needs to be removed. Sid Copeland Water Treatment plant lower pond drawings are not available. Volume estimates are below:
    a. North Water Treatment Plant Pond – 100 to 150 yards of sludge hauled once a year
    b. South Water Treatment Plant Drying Beds – 200 to 300 yards of sludge hauled once a year

    *Above data are estimates and vary with actual production

2. Lab testing results for 2025 have been uploaded for prospective bidders. The Contractor will be responsible for collecting and analyzing any additional required samples for 2025.

3. If applicable, please prepare quotes with options based on hauling tiers.

4. Quotes for the compliance and recommendations portion should be called out separately from the sludge removal for comparison.

5. All efforts need to be made to remove the minimum amount of filter media material while removing sludge from the drying beds, E.g a bobcat with tracks. Additionally, no equipment should damage the beds underdrains or membranes. Contractor will be responsible for any excessive damage done to the beds during sludge removal.

6. Site visits are allowed, please contact Greg Venette to schedule (contact information above).

Standard Terms and Conditions

When preparing a proposal for submission in response to this RFQ, contractors should be aware of the following terms and conditions which have been established by the City of Louisville:

- This request for quotes is not an offer to contract. The provisions in this RFQ and any purchasing policies or procedures of the City are solely for the fiscal responsibility of the City, and confer no rights, duties or entitlements to any party submitting quotes. The City of Louisville reserves the right to reject any and all quotes, to consider alternatives, to waive any informalities and irregularities, to abandon the project and this RFQ at any time, and to re-solicit quotes.

- Contractor acknowledges that any potential expenditure incurred by selected firm outside the current fiscal year is contingent upon appropriation, budgeting, and availability of specific funds for such proposed expenditure. The current fiscal year ends on December 31, 2025.

- The City of Louisville reserves the right to conduct such investigations of and discussions with those who have submitted quotes or other entities as they deem necessary or appropriate to assist in the evaluation of any quote or to secure maximum clarification and completeness of any quotes.

- The successful proposer shall be required to sign a contract with the City in a form provided by and acceptable to the City. The contractor shall be an independent contractor of the City.

- The City of Louisville assumes no responsibility for payment of any expenses incurred by any proponent as part of the RFQ process.

- All responses to this RFQ become the property of the City upon receipt and regardless of selection or rejection, and will not be returned, except that the City may return late responses submitted after the response deadline. Any trade secrets or confidential commercial or financial information submitted with any response is subject to potential disclosure, and submitting it constitutes proposer's waiver of any recourse against the City in respect to disclosure and proposer's agreement to indemnify the City for any costs, legal fees or expenses incurred in relation to any proceeding concerning disclosure of such information. Any trade secrets or confidential commercial or financial information submitted with a response shall be clearly segregated and marked; provided; however, that neither cost information nor the total RFP will be considered proprietary. The City will notify the vendor of any request for disclosure of information so segregated and marked that may be subject to nondisclosure, and it will be the responsibility of the vendor to object and to pursue any legal actions pursuant to Colorado law. A vendor shall notify the City within 24 hours of notification by City of request for disclosure of the vendor's objections to disclosure and the vendor's intent to pursue lawful protection under Colorado law.

ANALYTICAL REPORT

August 20, 2025

1 Cp
2 Tc
3 Ss
4 Cn
5 Sr
6 Qc
7 Gl
8 Al
9 Sc

Radiation Pros LLC

Sample Delivery Group:	L1884998
Samples Received:	08/05/2025
Project Number:	FP-3573
Description:	Pond Sludge Sampling
Report To:	Aiden Franklin 14 Inverness Drive East Suite A-220 Englewood, CO 80112

Entire Report Reviewed By:

Kelly Mercer
Project Manager

Results relate only to the items tested or calibrated and are reported as rounded values. This test report shall not be reproduced, except in full, without written approval of the laboratory. Where applicable, sampling conducted by Pace Analytical National is performed per guidance provided in laboratory standard operating procedures ENV-SOP-MTJL-0067 and ENV-SOP-MTJL-0068. Where sampling conducted by the customer, results relate to the accuracy of the information provided, and as the samples are received.

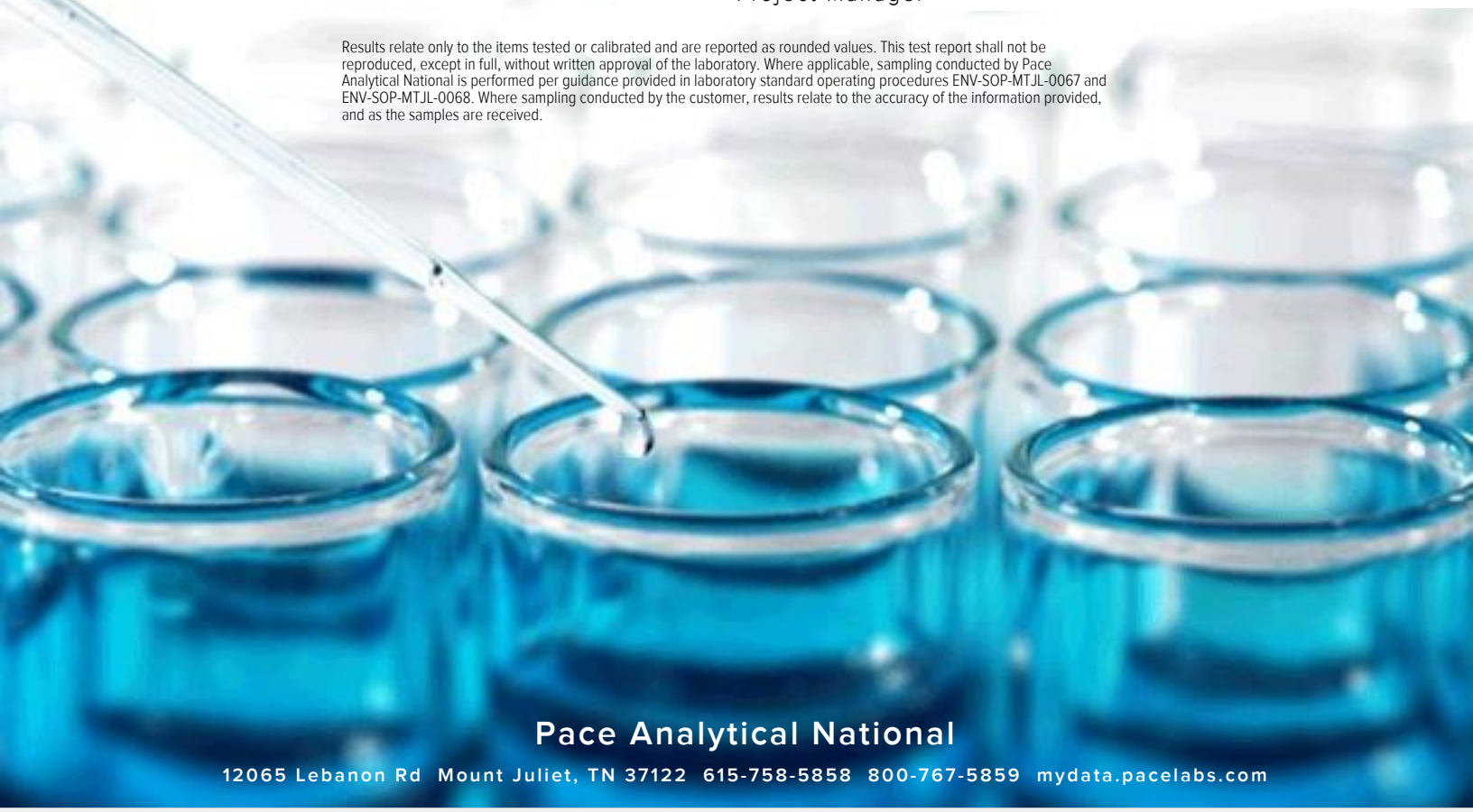

Pace Analytical National

12065 Lebanon Rd Mount Juliet, TN 37122 615-758-5858 800-767-5859 mydata.pacelabs.com

TABLE OF CONTENTS

Cp: Cover Page 1

Tc: Table of Contents 2

Ss: Sample Summary 3

Cn: Case Narrative 4

Sr: Sample Results 5

FP-3573-01-N L1884998-01 5

FP-3573-01-N L1884998-02 6

FP-3573-01-S L1884998-03 8

FP-3573-01-S L1884998-04 9

Qc: Quality Control Summary 11

Wet Chemistry by Method 9023 11

Wet Chemistry by Method 9045D 12

Mercury by Method 7470A 13

Metals (ICP) by Method 6010D 14

Volatile Organic Compounds (GC/MS) by Method 8260D 16

Polychlorinated Biphenyls (GC) by Method 8082 A 18

Semi Volatile Organic Compounds (GC/MS) by Method 8270C 19

Gl: Glossary of Terms 21

Al: Accreditations & Locations 22

Sc: Sample Chain of Custody 23

FP-3573-01-N L1884998-01

Collected by	Collected date/time	Received date/time
Aiden Franklin	08/04/25 00:00	08/05/25 09:00

Method	Batch	Dilution	Preparation date/time	Analysis date/time	Analyst	Location
Wet Chemistry by Method 9023	WG2577853	1	08/12/25 09:17	08/12/25 14:08	ASH	Mt. Juliet, TN
Wet Chemistry by Method 9045D	WG2577223	1	08/11/25 08:57	08/12/25 11:30	BJM	Mt. Juliet, TN
Polychlorinated Biphenyls (GC) by Method 8082 A	WG2576698	1	08/11/25 07:45	08/11/25 23:23	HMH	Mt. Juliet, TN

FP-3573-01-N L1884998-02

Collected by	Collected date/time	Received date/time
Aiden Franklin	08/04/25 00:00	08/05/25 09:00

Method	Batch	Dilution	Preparation date/time	Analysis date/time	Analyst	Location
Preparation by Method 1311	WG2573705	1	08/07/25 13:20	08/07/25 13:20	BTP	Mt. Juliet, TN
Preparation by Method 1311	WG2575191	1	08/07/25 16:19	08/07/25 16:19	PNK	Mt. Juliet, TN
Mercury by Method 7470A	WG2575757	1	08/08/25 11:24	08/10/25 13:25	NDL	Mt. Juliet, TN
Metals (ICP) by Method 6010D	WG2576214	1	08/09/25 10:42	08/09/25 21:31	BAG	Mt. Juliet, TN
Volatile Organic Compounds (GC/MS) by Method 8260D	WG2576347	1	08/09/25 17:52	08/09/25 17:52	ACG	Mt. Juliet, TN
Semi Volatile Organic Compounds (GC/MS) by Method 8270C	WG2576716	1	08/11/25 08:06	08/13/25 00:04	JCH	Mt. Juliet, TN

FP-3573-01-S L1884998-03

Collected by	Collected date/time	Received date/time
Aiden Franklin	08/04/25 00:00	08/05/25 09:00

Method	Batch	Dilution	Preparation date/time	Analysis date/time	Analyst	Location
Wet Chemistry by Method 9023	WG2577853	1	08/12/25 09:17	08/12/25 14:11	ASH	Mt. Juliet, TN
Wet Chemistry by Method 9045D	WG2577223	1	08/11/25 08:57	08/12/25 11:30	BJM	Mt. Juliet, TN
Polychlorinated Biphenyls (GC) by Method 8082 A	WG2576698	1	08/11/25 07:45	08/11/25 23:32	HMH	Mt. Juliet, TN

FP-3573-01-S L1884998-04

Collected by	Collected date/time	Received date/time
Aiden Franklin	08/04/25 00:00	08/05/25 09:00

Method	Batch	Dilution	Preparation date/time	Analysis date/time	Analyst	Location
Preparation by Method 1311	WG2573705	1	08/07/25 13:20	08/07/25 13:20	BTP	Mt. Juliet, TN
Preparation by Method 1311	WG2575191	1	08/07/25 16:19	08/07/25 16:19	PNK	Mt. Juliet, TN
Mercury by Method 7470A	WG2575757	1	08/08/25 11:24	08/10/25 13:27	NDL	Mt. Juliet, TN
Metals (ICP) by Method 6010D	WG2576214	1	08/09/25 10:42	08/09/25 21:33	BAG	Mt. Juliet, TN
Volatile Organic Compounds (GC/MS) by Method 8260D	WG2576347	1	08/09/25 18:14	08/09/25 18:14	ACG	Mt. Juliet, TN
Semi Volatile Organic Compounds (GC/MS) by Method 8270C	WG2576716	1	08/11/25 08:06	08/13/25 00:26	JCH	Mt. Juliet, TN

All sample aliquots were received at the correct temperature, in the proper containers, with the appropriate preservatives, and within method specified holding times, unless qualified or notated within the report. Where applicable, all MDL (LOD) and RDL (LOQ) values reported for environmental samples have been corrected for the dilution factor used in the analysis. All Method and Batch Quality Control are within established criteria except where addressed in this case narrative, a non-conformance form or properly qualified within the sample results. By my digital signature below, I affirm to the best of my knowledge, all problems/anomalies observed by the laboratory as having the potential to affect the quality of the data have been identified by the laboratory, and no information or data have been knowingly withheld that would affect the quality of the data.

Kelly Mercer
Project Manager

Wet Chemistry by Method 9023

Analyte	Result mg/kg	Qualifier	RDL mg/kg	Dilution	Analysis date / time	Batch
Extracted TOX	ND		40.0	1	08/12/2025 14:08	WG2577853

Wet Chemistry by Method 9045D

Analyte	Result su	Qualifier	Dilution	Analysis date / time	Batch
pH	7.56	T8	1	08/12/2025 11:30	WG2577223

Sample Narrative:

L1884998-01 WG2577223: 7.56 at 20.6C

Polychlorinated Biphenyls (GC) by Method 8082 A

Analyte	Result mg/kg	Qualifier	RDL mg/kg	Dilution	Analysis date / time	Batch
PCB 1016	ND		0.0340	1	08/11/2025 23:23	WG2576698
PCB 1221	ND		0.0340	1	08/11/2025 23:23	WG2576698
PCB 1232	ND		0.0340	1	08/11/2025 23:23	WG2576698
PCB 1242	ND		0.0340	1	08/11/2025 23:23	WG2576698
PCB 1248	ND		0.0170	1	08/11/2025 23:23	WG2576698
PCB 1254	ND		0.0170	1	08/11/2025 23:23	WG2576698
PCB 1260	ND		0.0170	1	08/11/2025 23:23	WG2576698
(S) Decachlorobiphenyl	*70.7*		*10.0-135*		*08/11/2025 23:23*	WG2576698
(S) Tetrachloro-m-xylene	*98.2*		*10.0-139*		*08/11/2025 23:23*	WG2576698

Preparation by Method 1311

Analyte	Result	Qualifier	Prep date / time	Batch
TCLP Extraction	-		8/7/2025 1:20:28 PM	WG2573705
TCLP ZHE Extraction	-		8/7/2025 4:19:20 PM	WG2575191
Initial pH	7.00		8/7/2025 1:20:28 PM	WG2573705
Final pH	5.14		8/7/2025 1:20:28 PM	WG2573705

Mercury by Method 7470A

Analyte	Result mg/l	Qualifier	RDL mg/l	Limit mg/l	Dilution	Analysis date / time	Batch
Mercury	ND		0.0100	0.20	1	08/10/2025 13:25	WG2575757

Metals (ICP) by Method 6010D

Analyte	Result mg/l	Qualifier	RDL mg/l	Limit mg/l	Dilution	Analysis date / time	Batch
Arsenic	ND		0.100	5	1	08/09/2025 21:31	WG2576214
Barium	0.364		0.100	100	1	08/09/2025 21:31	WG2576214
Cadmium	ND		0.100	1	1	08/09/2025 21:31	WG2576214
Chromium	ND		0.100	5	1	08/09/2025 21:31	WG2576214
Lead	ND		0.100	5	1	08/09/2025 21:31	WG2576214
Selenium	ND		0.100	1	1	08/09/2025 21:31	WG2576214
Silver	ND		0.100	5	1	08/09/2025 21:31	WG2576214

Volatile Organic Compounds (GC/MS) by Method 8260D

Analyte	Result mg/l	Qualifier	RDL mg/l	Limit mg/l	Dilution	Analysis date / time	Batch
Benzene	ND		0.0500	0.50	1	08/09/2025 17:52	WG2576347
Carbon tetrachloride	ND		0.0500	0.50	1	08/09/2025 17:52	WG2576347
Chlorobenzene	ND		0.0500	100	1	08/09/2025 17:52	WG2576347
Chloroform	ND		0.250	6	1	08/09/2025 17:52	WG2576347
1,2-Dichloroethane	ND		0.0500	0.50	1	08/09/2025 17:52	WG2576347
1,1-Dichloroethene	ND		0.0500	0.70	1	08/09/2025 17:52	WG2576347
2-Butanone (MEK)	ND		0.500	200	1	08/09/2025 17:52	WG2576347
Tetrachloroethene	ND		0.0500	0.70	1	08/09/2025 17:52	WG2576347
Trichloroethene	ND		0.0500	0.50	1	08/09/2025 17:52	WG2576347
Vinyl chloride	ND		0.0500	0.20	1	08/09/2025 17:52	WG2576347
(S) Toluene-d8	*97.7*		*80.0-120*			*08/09/2025 17:52*	WG2576347
(S) 4-Bromofluorobenzene	*79.6*		*77.0-126*			*08/09/2025 17:52*	WG2576347
(S) 1,2-Dichloroethane-d4	*118*		*70.0-130*			*08/09/2025 17:52*	WG2576347

Semi Volatile Organic Compounds (GC/MS) by Method 8270C

Analyte	Result mg/l	Qualifier	RDL mg/l	Limit mg/l	Dilution	Analysis date / time	Batch
1,4-Dichlorobenzene	ND		0.100	7.50	1	08/13/2025 00:04	WG2576716
2,4-Dinitrotoluene	ND		0.100	0.13	1	08/13/2025 00:04	WG2576716
Hexachlorobenzene	ND		0.100	0.13	1	08/13/2025 00:04	WG2576716
Hexachloro-1,3-butadiene	ND		0.100	0.50	1	08/13/2025 00:04	WG2576716
Hexachloroethane	ND		0.100	3	1	08/13/2025 00:04	WG2576716
Nitrobenzene	ND		0.100	2	1	08/13/2025 00:04	WG2576716
Pyridine	ND		0.100	5	1	08/13/2025 00:04	WG2576716
3&4-Methyl Phenol	ND		0.100	400	1	08/13/2025 00:04	WG2576716
2-Methylphenol	ND		0.100	200	1	08/13/2025 00:04	WG2576716
Pentachlorophenol	ND	C3	0.100	100	1	08/13/2025 00:04	WG2576716
2,4,5-Trichlorophenol	ND		0.100	400	1	08/13/2025 00:04	WG2576716
2,4,6-Trichlorophenol	ND		0.100	2	1	08/13/2025 00:04	WG2576716
(S) 2-Fluorophenol	*45.2*		*10.0-120*			*08/13/2025 00:04*	WG2576716

Semi Volatile Organic Compounds (GC/MS) by Method 8270C

Analyte	Result mg/l	Qualifier	RDL mg/l	Limit mg/l	Dilution	Analysis date / time	Batch
(S) Phenol-d5	*29.3*		*10.0-120*			*08/13/2025 00:04*	WG2576716
(S) Nitrobenzene-d5	*65.6*		*10.0-127*			*08/13/2025 00:04*	WG2576716
(S) 2-Fluorobiphenyl	*65.4*		*10.0-130*			*08/13/2025 00:04*	WG2576716
(S) 2,4,6-Tribromophenol	*73.0*		*10.0-155*			*08/13/2025 00:04*	WG2576716
(S) p-Terphenyl-d14	*82.5*		*10.0-128*			*08/13/2025 00:04*	WG2576716

Wet Chemistry by Method 9023

Analyte	Result mg/kg	Qualifier	RDL mg/kg	Dilution	Analysis date / time	Batch
Extracted TOX	ND		40.0	1	08/12/2025 14:11	WG2577853

Wet Chemistry by Method 9045D

Analyte	Result su	Qualifier	Dilution	Analysis date / time	Batch
pH	6.72	T8	1	08/12/2025 11:30	WG2577223

Sample Narrative:

L1884998-03 WG2577223: 6.72 at 20.7C

Polychlorinated Biphenyls (GC) by Method 8082 A

Analyte	Result mg/kg	Qualifier	RDL mg/kg	Dilution	Analysis date / time	Batch
PCB 1016	ND		0.0340	1	08/11/2025 23:32	WG2576698
PCB 1221	ND		0.0340	1	08/11/2025 23:32	WG2576698
PCB 1232	ND		0.0340	1	08/11/2025 23:32	WG2576698
PCB 1242	ND		0.0340	1	08/11/2025 23:32	WG2576698
PCB 1248	ND		0.0170	1	08/11/2025 23:32	WG2576698
PCB 1254	ND		0.0170	1	08/11/2025 23:32	WG2576698
PCB 1260	ND		0.0170	1	08/11/2025 23:32	WG2576698
(S) Decachlorobiphenyl	*47.5*		*10.0-135*		*08/11/2025 23:32*	WG2576698
(S) Tetrachloro-m-xylene	*86.5*		*10.0-139*		*08/11/2025 23:32*	WG2576698

1 Cp
2 Tc
3 Ss
4 Cn
5 Sr
6 Qc
7 Gl
8 Al
9 Sc

Preparation by Method 1311

Analyte	Result	Qualifier	Prep date / time	Batch
TCLP Extraction	-		8/7/2025 1:20:28 PM	WG2573705
TCLP ZHE Extraction	-		8/7/2025 4:19:20 PM	WG2575191
Initial pH	6.19		8/7/2025 1:20:28 PM	WG2573705
Final pH	5.05		8/7/2025 1:20:28 PM	WG2573705

Mercury by Method 7470A

Analyte	Result mg/l	Qualifier	RDL mg/l	Limit mg/l	Dilution	Analysis date / time	Batch
Mercury	ND		0.0100	0.20	1	08/10/2025 13:27	WG2575757

Metals (ICP) by Method 6010D

Analyte	Result mg/l	Qualifier	RDL mg/l	Limit mg/l	Dilution	Analysis date / time	Batch
Arsenic	ND		0.100	5	1	08/09/2025 21:33	WG2576214
Barium	0.261		0.100	100	1	08/09/2025 21:33	WG2576214
Cadmium	ND		0.100	1	1	08/09/2025 21:33	WG2576214
Chromium	ND		0.100	5	1	08/09/2025 21:33	WG2576214
Lead	ND		0.100	5	1	08/09/2025 21:33	WG2576214
Selenium	ND		0.100	1	1	08/09/2025 21:33	WG2576214
Silver	ND		0.100	5	1	08/09/2025 21:33	WG2576214

Volatile Organic Compounds (GC/MS) by Method 8260D

Analyte	Result mg/l	Qualifier	RDL mg/l	Limit mg/l	Dilution	Analysis date / time	Batch
Benzene	ND		0.0500	0.50	1	08/09/2025 18:14	WG2576347
Carbon tetrachloride	ND		0.0500	0.50	1	08/09/2025 18:14	WG2576347
Chlorobenzene	ND		0.0500	100	1	08/09/2025 18:14	WG2576347
Chloroform	ND		0.250	6	1	08/09/2025 18:14	WG2576347
1,2-Dichloroethane	ND		0.0500	0.50	1	08/09/2025 18:14	WG2576347
1,1-Dichloroethene	ND		0.0500	0.70	1	08/09/2025 18:14	WG2576347
2-Butanone (MEK)	ND		0.500	200	1	08/09/2025 18:14	WG2576347
Tetrachloroethene	ND		0.0500	0.70	1	08/09/2025 18:14	WG2576347
Trichloroethene	ND		0.0500	0.50	1	08/09/2025 18:14	WG2576347
Vinyl chloride	ND		0.0500	0.20	1	08/09/2025 18:14	WG2576347
(S) Toluene-d8	*98.8*		*80.0-120*			*08/09/2025 18:14*	WG2576347
(S) 4-Bromofluorobenzene	*78.0*		*77.0-126*			*08/09/2025 18:14*	WG2576347
(S) 1,2-Dichloroethane-d4	*120*		*70.0-130*			*08/09/2025 18:14*	WG2576347

Semi Volatile Organic Compounds (GC/MS) by Method 8270C

Analyte	Result mg/l	Qualifier	RDL mg/l	Limit mg/l	Dilution	Analysis date / time	Batch
1,4-Dichlorobenzene	ND		0.100	7.50	1	08/13/2025 00:26	WG2576716
2,4-Dinitrotoluene	ND		0.100	0.13	1	08/13/2025 00:26	WG2576716
Hexachlorobenzene	ND		0.100	0.13	1	08/13/2025 00:26	WG2576716
Hexachloro-1,3-butadiene	ND		0.100	0.50	1	08/13/2025 00:26	WG2576716
Hexachloroethane	ND		0.100	3	1	08/13/2025 00:26	WG2576716
Nitrobenzene	ND		0.100	2	1	08/13/2025 00:26	WG2576716
Pyridine	ND		0.100	5	1	08/13/2025 00:26	WG2576716
3&4-Methyl Phenol	ND		0.100	400	1	08/13/2025 00:26	WG2576716
2-Methylphenol	ND		0.100	200	1	08/13/2025 00:26	WG2576716
Pentachlorophenol	ND	C3	0.100	100	1	08/13/2025 00:26	WG2576716
2,4,5-Trichlorophenol	ND		0.100	400	1	08/13/2025 00:26	WG2576716
2,4,6-Trichlorophenol	ND		0.100	2	1	08/13/2025 00:26	WG2576716
(S) 2-Fluorophenol	*45.2*		*10.0-120*			*08/13/2025 00:26*	WG2576716

Semi Volatile Organic Compounds (GC/MS) by Method 8270C

Analyte	Result mg/l	Qualifier	RDL mg/l	Limit mg/l	Dilution	Analysis date / time	Batch
(S) Phenol-d5	*30.0*		*10.0-120*			*08/13/2025 00:26*	WG2576716
(S) Nitrobenzene-d5	*72.7*		*10.0-127*			*08/13/2025 00:26*	WG2576716
(S) 2-Fluorobiphenyl	*65.9*		*10.0-130*			*08/13/2025 00:26*	WG2576716
(S) 2,4,6-Tribromophenol	*72.0*		*10.0-155*			*08/13/2025 00:26*	WG2576716
(S) p-Terphenyl-d14	*86.6*		*10.0-128*			*08/13/2025 00:26*	WG2576716

QUALITY CONTROL SUMMARY

L1884998-01,03

Method Blank (MB)

(MB) R4257475-1 08/12/25 13:24

Analyte	MB Result mg/kg	MB Qualifier	MB MDL mg/kg	MB RDL mg/kg
Extracted TOX	U		17.6	40.0

Laboratory Control Sample (LCS)

(LCS) R4257475-2 08/12/25 13:26

Analyte	Spike Amount mg/kg	LCS Result mg/kg	LCS Rec. %	Rec. Limits %	LCS Qualifier
Extracted TOX	500	527	105	85.0-115	

L1884918-01 Original Sample (OS) • Matrix Spike (MS) • Matrix Spike Duplicate (MSD)

(OS) L1884918-01 08/12/25 13:49 • (MS) R4257475-3 08/12/25 13:51 • (MSD) R4257475-4 08/12/25 13:56

Analyte	Spike Amount mg/kg	Original Result mg/kg	MS Result mg/kg	MSD Result mg/kg	MS Rec. %	MSD Rec. %	Dilution	Rec. Limits %	MS Qualifier	MSD Qualifier	RPD %	RPD Limits %
Extracted TOX	500	ND	517	524	103	105	1	80.0-120			1.49	20

L1885004-03 Original Sample (OS) • Duplicate (DUP)

(OS) L1885004-03 08/12/25 11:30 • (DUP) R4257384-2 08/12/25 11:30

Analyte	Original Result	DUP Result	Dilution	DUP RPD	DUP Qualifier	DUP RPD Limits
	su	su		%		%
pH	7.97	7.96	1	0.126		1

Sample Narrative:

OS: 7.97 at 20.7C

DUP: 7.96 at 20.6C

Laboratory Control Sample (LCS)

(LCS) R4257384-1 08/12/25 11:30

Analyte	Spike Amount	LCS Result	LCS Rec.	Rec. Limits	LCS Qualifier
	su	su	%	%	
pH	10.0	9.98	99.8	99.0-101	

Sample Narrative:

LCS: 9.98 at 21C

QUALITY CONTROL SUMMARY

L1884998-02,04

Method Blank (MB)

(MB) R4256619-1 08/10/25 12:44

Analyte	MB Result mg/l	MB Qualifier	MB MDL mg/l	MB RDL mg/l
Mercury	U		0.00333	0.0100

Laboratory Control Sample (LCS)

(LCS) R4256619-2 08/10/25 12:47

Analyte	Spike Amount mg/l	LCS Result mg/l	LCS Rec. %	Rec. Limits %	LCS Qualifier
Mercury	0.0300	0.0284	94.7	80.0-120	

L1884879-04 Original Sample (OS) • Matrix Spike (MS) • Matrix Spike Duplicate (MSD)

(OS) L1884879-04 08/10/25 12:50 • (MS) R4256619-4 08/10/25 12:54 • (MSD) R4256619-5 08/10/25 12:57

Analyte	Spike Amount mg/l	Original Result mg/l	MS Result mg/l	MSD Result mg/l	MS Rec. %	MSD Rec. %	Dilution	Rec. Limits %	MS Qualifier	MSD Qualifier	RPD %	RPD Limits %
Mercury	0.0300	ND	0.0280	0.0277	93.4	92.3	1	75.0-125			1.20	20

L1884963-01 Original Sample (OS) • Matrix Spike (MS) • Matrix Spike Duplicate (MSD)

(OS) L1884963-01 08/10/25 13:00 • (MS) R4256619-6 08/10/25 13:02 • (MSD) R4256619-7 08/10/25 13:10

Analyte	Spike Amount mg/l	Original Result mg/l	MS Result mg/l	MSD Result mg/l	MS Rec. %	MSD Rec. %	Dilution	Rec. Limits %	MS Qualifier	MSD Qualifier	RPD %	RPD Limits %
Mercury	0.0300	ND	0.0295	0.0283	98.4	94.2	1	75.0-125			4.35	20

QUALITY CONTROL SUMMARY

L1884998-02,04

Method Blank (MB)

(MB) R4256461-1 08/09/25 21:04

Analyte	MB Result mg/l	MB Qualifier	MB MDL mg/l	MB RDL mg/l
Arsenic	U		0.0333	0.100
Barium	U		0.0333	0.100
Cadmium	U		0.0333	0.100
Chromium	U		0.0333	0.100
Lead	U		0.0333	0.100
Selenium	U		0.0333	0.100
Silver	U		0.0333	0.100

Laboratory Control Sample (LCS)

(LCS) R4256461-2 08/09/25 21:06

Analyte	Spike Amount mg/l	LCS Result mg/l	LCS Rec. %	Rec. Limits %	LCS Qualifier
Arsenic	10.0	10.1	101	80.0-120	
Barium	10.0	10.4	104	80.0-120	
Cadmium	10.0	10.1	101	80.0-120	
Chromium	10.0	10.2	102	80.0-120	
Lead	10.0	9.82	98.2	80.0-120	
Selenium	10.0	9.71	97.1	80.0-120	
Silver	2.00	2.01	100	80.0-120	

L1884963-01 Original Sample (OS) • Matrix Spike (MS) • Matrix Spike Duplicate (MSD)

(OS) L1884963-01 08/09/25 21:08 • (MS) R4256461-4 08/09/25 21:11 • (MSD) R4256461-5 08/09/25 21:13

Analyte	Spike Amount mg/l	Original Result mg/l	MS Result mg/l	MSD Result mg/l	MS Rec. %	MSD Rec. %	Dilution	Rec. Limits %	MS Qualifier	MSD Qualifier	RPD %	RPD Limits %
Arsenic	10.0	ND	10.1	9.89	101	98.9	1	75.0-125			2.09	20
Barium	10.0	0.149	10.8	10.7	107	105	1	75.0-125			1.41	20
Cadmium	10.0	ND	10.3	10.1	103	101	1	75.0-125			1.86	20
Chromium	10.0	ND	10.5	10.3	105	103	1	75.0-125			2.26	20
Lead	10.0	ND	9.81	9.64	98.1	96.4	1	75.0-125			1.75	20
Selenium	10.0	ND	9.73	9.51	97.3	95.1	1	75.0-125			2.31	20
Silver	2.00	ND	2.05	2.00	102	99.9	1	75.0-125			2.56	20

QUALITY CONTROL SUMMARY

L1884998-02,04

L1884963-02 Original Sample (OS) • Matrix Spike (MS) • Matrix Spike Duplicate (MSD)

(OS) L1884963-02 08/09/25 21:14 • (MS) R4256461-6 08/09/25 21:16 • (MSD) R4256461-7 08/09/25 21:18

Analyte	Spike Amount mg/l	Original Result mg/l	MS Result mg/l	MSD Result mg/l	MS Rec. %	MSD Rec. %	Dilution	Rec. Limits %	MS Qualifier	MSD Qualifier	RPD %	RPD Limits %
Arsenic	10.0	ND	9.96	9.96	99.6	99.6	1	75.0-125			0.0394	20
Barium	10.0	0.148	10.7	10.7	106	106	1	75.0-125			0.281	20
Cadmium	10.0	ND	10.2	10.2	102	102	1	75.0-125			0.263	20
Chromium	10.0	ND	10.4	10.4	104	104	1	75.0-125			0.418	20
Lead	10.0	ND	9.74	9.59	97.4	95.9	1	75.0-125			1.49	20
Selenium	10.0	ND	9.56	9.57	95.2	95.2	1	75.0-125			0.0598	20
Silver	2.00	ND	2.02	2.01	101	100	1	75.0-125			0.766	20

Method Blank (MB)

(MB) R4257257-3 08/09/25 13:28

Analyte	MB Result mg/l	MB Qualifier	MB MDL mg/l	MB RDL mg/l
Benzene	U		0.0167	0.0500
Carbon tetrachloride	U		0.0167	0.0500
Chlorobenzene	U		0.0167	0.0500
Chloroform	U		0.0833	0.250
1,2-Dichloroethane	U		0.0167	0.0500
1,1-Dichloroethene	U		0.0167	0.0500
2-Butanone (MEK)	U		0.167	0.500
Tetrachloroethene	U		0.0167	0.0500
Trichloroethene	U		0.0167	0.0500
Vinyl chloride	U		0.0167	0.0500
(S) Toluene-d8	*101*			*80.0-120*
(S) 4-Bromofluorobenzene	*77.1*			*77.0-126*
(S) 1,2-Dichloroethane-d4	*118*			*70.0-130*

Laboratory Control Sample (LCS) • Laboratory Control Sample Duplicate (LCSD)

(LCS) R4257257-1 08/09/25 09:53 • (LCSD) R4257257-2 08/09/25 10:15

Analyte	Spike Amount mg/l	LCS Result mg/l	LCSD Result mg/l	LCS Rec. %	LCSD Rec. %	Rec. Limits %	LCS Qualifier	LCSD Qualifier	RPD %	RPD Limits %
Benzene	1.25	1.16	1.08	92.8	86.4	70.0-123			7.14	20
Carbon tetrachloride	1.25	1.20	1.12	96.0	89.6	68.0-126			6.90	20
Chlorobenzene	1.25	1.13	1.08	90.4	86.4	80.0-121			4.52	20
Chloroform	1.25	1.20	1.11	96.0	88.8	73.0-120			7.79	20
1,2-Dichloroethane	1.25	1.27	1.14	102	91.2	70.0-128			10.8	20
1,1-Dichloroethene	1.25	1.17	1.11	93.6	88.8	71.0-124			5.26	20
2-Butanone (MEK)	6.25	6.02	6.35	96.3	102	44.0-160			5.34	20
Tetrachloroethene	1.25	1.21	1.15	96.8	92.0	72.0-132			5.08	20
Trichloroethene	1.25	1.12	1.04	89.6	83.2	78.0-124			7.41	20
Vinyl chloride	1.25	1.04	0.999	83.2	79.9	67.0-131			4.02	20
(S) Toluene-d8				*94.3*	*97.9*	*80.0-120*				
(S) 4-Bromofluorobenzene				*89.4*	*89.4*	*77.0-126*				
(S) 1,2-Dichloroethane-d4				*109*	*108*	*70.0-130*				

L1884445-01 Original Sample (OS) • Matrix Spike (MS) • Matrix Spike Duplicate (MSD)

(OS) L1884445-01 08/09/25 16:24 • (MS) R4257257-4 08/09/25 20:26 • (MSD) R4257257-5 08/09/25 20:48

Analyte	Spike Amount mg/l	Original Result mg/l	MS Result mg/l	MSD Result mg/l	MS Rec. %	MSD Rec. %	Dilution	Rec. Limits %	MS Qualifier	MSD Qualifier	RPD %	RPD Limits %
Benzene	1.25	ND	1.32	1.34	106	107	1	17.0-158			1.50	27
Carbon tetrachloride	1.25	ND	1.41	1.41	113	113	1	23.0-159			0.000	28
Chlorobenzene	1.25	ND	1.27	1.30	102	104	1	33.0-152			2.33	27
Chloroform	1.25	ND	1.34	1.36	107	109	1	29.0-154			1.48	28
1,2-Dichloroethane	1.25	ND	1.37	1.39	110	111	1	29.0-151			1.45	27
1,1-Dichloroethene	1.25	ND	1.38	1.41	110	113	1	11.0-160			2.15	29
2-Butanone (MEK)	6.25	ND	6.16	5.98	98.6	95.7	1	10.0-160			2.97	32
Tetrachloroethene	1.25	ND	1.41	1.44	113	115	1	10.0-160			2.11	27
Trichloroethene	1.25	ND	1.25	1.29	100	103	1	10.0-160			3.15	25
Vinyl chloride	1.25	ND	1.29	1.35	103	108	1	10.0-160			4.55	27
(S) Toluene-d8					*97.1*	*97.2*		*80.0-120*				
(S) 4-Bromofluorobenzene					*90.6*	*88.4*		*77.0-126*				
(S) 1,2-Dichloroethane-d4					*112*	*109*		*70.0-130*				

L1884963-01 Original Sample (OS) • Matrix Spike (MS)

(OS) L1884963-01 08/09/25 17:08 • (MS) R4257257-6 08/09/25 21:10

Analyte	Spike Amount mg/l	Original Result mg/l	MS Result mg/l	MS Rec. %	Dilution	Rec. Limits %	MS Qualifier
Benzene	1.25	ND	1.32	106	1	17.0-158	
Carbon tetrachloride	1.25	ND	1.42	114	1	23.0-159	
Chlorobenzene	1.25	ND	1.30	104	1	33.0-152	
Chloroform	1.25	ND	1.34	107	1	29.0-154	
1,2-Dichloroethane	1.25	ND	1.36	109	1	29.0-151	
1,1-Dichloroethene	1.25	ND	1.44	115	1	11.0-160	
2-Butanone (MEK)	6.25	ND	7.78	124	1	10.0-160	
Tetrachloroethene	1.25	ND	1.45	116	1	10.0-160	
Trichloroethene	1.25	ND	1.32	106	1	10.0-160	
Vinyl chloride	1.25	ND	1.33	106	1	10.0-160	
(S) Toluene-d8				*99.2*		*80.0-120*	
(S) 4-Bromofluorobenzene				*89.6*		*77.0-126*	
(S) 1,2-Dichloroethane-d4				*108*		*70.0-130*	

Method Blank (MB)

(MB) R4257445-1 08/11/25 23:05

Analyte	MB Result mg/kg	MB Qualifier	MB MDL mg/kg	MB RDL mg/kg
PCB 1016	U		0.0102	0.0340
PCB 1221	U		0.0107	0.0340
PCB 1232	U		0.0182	0.0340
PCB 1242	U		0.0101	0.0340
PCB 1248	U		0.0124	0.0170
PCB 1254	U		0.0104	0.0170
PCB 1260	U		0.0110	0.0170
(S) Decachlorobiphenyl	*29.3*			*10.0-135*
(S) Tetrachloro-m-xylene	*34.8*			*10.0-139*

Laboratory Control Sample (LCS)

(LCS) R4257445-2 08/11/25 23:14

Analyte	Spike Amount mg/kg	LCS Result mg/kg	LCS Rec. %	Rec. Limits %	LCS Qualifier
PCB 1016	0.167	0.0717	42.9	36.0-141	
PCB 1260	0.167	0.0798	47.8	37.0-145	
(S) Decachlorobiphenyl			*38.9*	*10.0-135*	
(S) Tetrachloro-m-xylene			*45.9*	*10.0-139*	

L1885052-01 Original Sample (OS) • Matrix Spike (MS) • Matrix Spike Duplicate (MSD)

(OS) L1885052-01 08/11/25 23:42 • (MS) R4257445-3 08/11/25 23:51 • (MSD) R4257445-4 08/12/25 00:00

Analyte	Spike Amount mg/kg	Original Result mg/kg	MS Result mg/kg	MSD Result mg/kg	MS Rec. %	MSD Rec. %	Dilution	Rec. Limits %	MS Qualifier	MSD Qualifier	RPD %	RPD Limits %
PCB 1016	0.164	ND	0.131	0.132	79.9	81.5	1	10.0-160			0.760	37
PCB 1260	0.164	ND	0.135	0.148	82.3	91.4	1	10.0-160			9.19	38
(S) Decachlorobiphenyl					*54.3*	*63.5*		*10.0-135*				
(S) Tetrachloro-m-xylene					*84.6*	*84.9*		*10.0-139*				

Method Blank (MB)

(MB) R4257551-2 08/11/25 23:30

Analyte	MB Result mg/l	MB Qualifier	MB MDL mg/l	MB RDL mg/l
1,4-Dichlorobenzene	U		0.0333	0.100
2,4-Dinitrotoluene	U		0.0333	0.100
Hexachlorobenzene	U		0.0333	0.100
Hexachloro-1,3-butadiene	U		0.0333	0.100
Hexachloroethane	U		0.0333	0.100
Nitrobenzene	U		0.0333	0.100
Pyridine	U		0.0333	0.100
3&4-Methyl Phenol	U		0.0333	0.100
2-Methylphenol	U		0.0333	0.100
Pentachlorophenol	U		0.0333	0.100
2,4,5-Trichlorophenol	U		0.0333	0.100
2,4,6-Trichlorophenol	U		0.0333	0.100
(S) 2-Fluorophenol	*12.0*			*10.0-120*
(S) Phenol-d5	*5.65*	J2		*10.0-120*
(S) Nitrobenzene-d5	*28.6*			*10.0-127*
(S) 2-Fluorobiphenyl	*36.1*			*10.0-130*
(S) 2,4,6-Tribromophenol	*60.0*			*10.0-155*
(S) p-Terphenyl-d14	*63.6*			*10.0-128*

Laboratory Control Sample (LCS)

(LCS) R4257551-1 08/11/25 23:08

Analyte	Spike Amount mg/l	LCS Result mg/l	LCS Rec. %	Rec. Limits %	LCS Qualifier
1,4-Dichlorobenzene	0.500	0.186	37.2	18.0-120	
2,4-Dinitrotoluene	0.500	0.345	69.0	49.0-124	
Hexachlorobenzene	0.500	0.330	66.0	44.0-120	
Hexachloro-1,3-butadiene	0.500	0.252	50.4	19.0-120	
Hexachloroethane	0.500	0.199	39.8	15.0-120	
Nitrobenzene	0.500	0.190	38.0	27.0-120	
Pyridine	0.500	0.0687	13.7	10.0-120	
3&4-Methyl Phenol	0.500	0.181	36.2	31.0-120	
2-Methylphenol	0.500	0.147	29.4	28.0-120	
Pentachlorophenol	0.500	0.372	74.4	23.0-120	
2,4,5-Trichlorophenol	0.500	0.331	66.2	44.0-120	
2,4,6-Trichlorophenol	0.500	0.314	62.8	42.0-120	
(S) 2-Fluorophenol			*23.0*	*10.0-120*	
(S) Phenol-d5			*14.4*	*10.0-120*	
(S) Nitrobenzene-d5			*31.9*	*10.0-127*	

Laboratory Control Sample (LCS)

(LCS) R4257551-1 08/11/25 23:08

Analyte	Spike Amount mg/l	LCS Result mg/l	LCS Rec. %	Rec. Limits %	LCS Qualifier
(S) 2-Fluorobiphenyl			*45.0*	*10.0-130*	
(S) 2,4,6-Tribromophenol			*83.0*	*10.0-155*	
(S) p-Terphenyl-d14			*65.5*	*10.0-128*	

L1883468-04 Original Sample (OS) • Matrix Spike (MS) • Matrix Spike Duplicate (MSD)

(OS) L1883468-04 08/12/25 03:06 • (MS) R4257551-3 08/12/25 03:28 • (MSD) R4257551-4 08/12/25 03:49

Analyte	Spike Amount mg/l	Original Result mg/l	MS Result mg/l	MSD Result mg/l	MS Rec. %	MSD Rec. %	Dilution	Rec. Limits %	MS Qualifier	MSD Qualifier	RPD %	RPD Limits %
1,4-Dichlorobenzene	0.500	ND	0.214	0.213	42.8	42.6	1	17.0-120			0.468	40
2,4-Dinitrotoluene	0.500	ND	0.408	0.388	81.6	77.6	1	39.0-125			5.03	25
Hexachlorobenzene	0.500	ND	0.371	0.373	74.2	74.6	1	35.0-122			0.538	24
Hexachloro-1,3-butadiene	0.500	ND	0.293	0.285	58.6	57.0	1	12.0-120			2.77	34
Hexachloroethane	0.500	ND	0.227	0.222	45.4	44.4	1	10.0-120			2.23	40
Nitrobenzene	0.500	ND	0.225	0.220	45.0	44.0	1	12.0-120			2.25	30
Pyridine	0.500	ND	ND	ND	12.7	13.0	1	10.0-120			2.34	37
3&4-Methyl Phenol	0.500	ND	0.219	0.216	43.8	43.2	1	10.0-120			1.38	36
2-Methylphenol	0.500	ND	0.173	0.176	34.6	35.2	1	10.0-120			1.72	30
Pentachlorophenol	0.500	ND	0.439	0.418	87.8	83.6	1	10.0-128			4.90	37
2,4,5-Trichlorophenol	0.500	ND	0.402	0.397	80.4	79.4	1	33.0-120			1.25	31
2,4,6-Trichlorophenol	0.500	ND	0.362	0.366	72.4	73.2	1	26.0-120			1.10	31
(S) 2-Fluorophenol					*24.4*	*26.1*		*10.0-120*				
(S) Phenol-d5					*15.6*	*15.1*		*10.0-120*				
(S) Nitrobenzene-d5					*39.3*	*37.1*		*10.0-127*				
(S) 2-Fluorobiphenyl					*51.7*	*55.2*		*10.0-130*				
(S) 2,4,6-Tribromophenol					*98.5*	*95.5*		*10.0-155*				
(S) p-Terphenyl-d14					*77.7*	*71.9*		*10.0-128*				

1 Cp
2 Tc
3 Ss
4 Cn
5 Sr
6 Qc
7 Gl
8 Al
9 Sc

Guide to Reading and Understanding Your Laboratory Report

The information below is designed to better explain the various terms used in your report of analytical results from the Laboratory. This is not intended as a comprehensive explanation, and if you have additional questions please contact your project representative.

Results Disclaimer - Information that may be provided by the customer, and contained within this report, include Permit Limits, Project Name, Sample ID, Sample Matrix, Sample Preservation, Field Blanks, Field Spikes, Field Duplicates, On-Site Data, Sampling Collection Dates/Times, and Sampling Location. Results relate to the accuracy of this information provided, and as the samples are received.

Abbreviations and Definitions

MDL	Method Detection Limit.
ND	Not detected at the Reporting Limit (or MDL where applicable).
RDL	Reported Detection Limit.
Rec.	Recovery.
RPD	Relative Percent Difference.
SDG	Sample Delivery Group.
(S)	Surrogate (Surrogate Standard) - Analytes added to every blank, sample, Laboratory Control Sample/Duplicate and Matrix Spike/Duplicate; used to evaluate analytical efficiency by measuring recovery. Surrogates are not expected to be detected in all environmental media.
U	Not detected at the Reporting Limit (or MDL where applicable).
Analyte	The name of the particular compound or analysis performed. Some Analyses and Methods will have multiple analytes reported.
Dilution	If the sample matrix contains an interfering material, the sample preparation volume or weight values differ from the standard, or if concentrations of analytes in the sample are higher than the highest limit of concentration that the laboratory can accurately report, the sample may be diluted for analysis. If a value different than 1 is used in this field, the result reported has already been corrected for this factor.
Limits	These are the target % recovery ranges or % difference value that the laboratory has historically determined as normal for the method and analyte being reported. Successful QC Sample analysis will target all analytes recovered or duplicated within these ranges.
Original Sample	The non-spiked sample in the prep batch used to determine the Relative Percent Difference (RPD) from a quality control sample. The Original Sample may not be included within the reported SDG.
Qualifier	This column provides a letter and/or number designation that corresponds to additional information concerning the result reported. If a Qualifier is present, a definition per Qualifier is provided within the Glossary and Definitions page and potentially a discussion of possible implications of the Qualifier in the Case Narrative if applicable.
Result	The actual analytical final result (corrected for any sample specific characteristics) reported for your sample. If there was no measurable result returned for a specific analyte, the result in this column may state “ND” (Not Detected) or “BDL” (Below Detectable Levels). The information in the results column should always be accompanied by either an MDL (Method Detection Limit) or RDL (Reporting Detection Limit) that defines the lowest value that the laboratory could detect or report for this analyte.
Uncertainty (Radiochemistry)	Confidence level of 2 sigma.
U (Radiochemistry)	Result + Error < MDA.
J (Radiochemistry)	Result < MDA; Result + Error > MDA.
Case Narrative (Cn)	A brief discussion about the included sample results, including a discussion of any non-conformances to protocol observed either at sample receipt by the laboratory from the field or during the analytical process. If present, there will be a section in the Case Narrative to discuss the meaning of any data qualifiers used in the report.
Quality Control Summary (Qc)	This section of the report includes the results of the laboratory quality control analyses required by procedure or analytical methods to assist in evaluating the validity of the results reported for your samples. These analyses are not being performed on your samples typically, but on laboratory generated material.
Sample Chain of Custody (Sc)	This is the document created in the field when your samples were initially collected. This is used to verify the time and date of collection, the person collecting the samples, and the analyses that the laboratory is requested to perform. This chain of custody also documents all persons (excluding commercial shippers) that have had control or possession of the samples from the time of collection until delivery to the laboratory for analysis.
Sample Results (Sr)	This section of your report will provide the results of all testing performed on your samples. These results are provided by sample ID and are separated by the analyses performed on each sample. The header line of each analysis section for each sample will provide the name and method number for the analysis reported.
Sample Summary (Ss)	This section of the Analytical Report defines the specific analyses performed for each sample ID, including the dates and times of preparation and/or analysis.

Qualifier	Description
C3	The reported concentration is an estimate. The continuing calibration standard associated with this data responded low. Method sensitivity check is acceptable.
J2	Surrogate recovery limits have been exceeded; values are outside lower control limits.
T8	Sample(s) received past/too close to holding time expiration.

Pace Analytical National 12065 Lebanon Rd Mount Juliet, TN 37122

Alabama	40660	Nebraska	NE-OS-15-05
Alaska	17-026	Nevada	TN000032021-1
Arizona	AZ0612	New Hampshire	2975
Arkansas	88-0469	New Jersey–NELAP	TN002
California	2932	New Mexico [1]	TN00003
Colorado	TN00003	New York	11742
Connecticut	PH-0197	North Carolina	Env375
Florida	E87487	North Carolina [1]	DW21704
Georgia	NELAP	North Carolina [3]	41
Georgia [1]	923	North Dakota	R-140
Idaho	TN00003	Ohio–VAP	CL0069
Illinois	200008	Oklahoma	9915
Indiana	C-TN-01	Oregon	TN200002
Iowa	364	Pennsylvania	68-02979
Kansas	E-10277	Rhode Island	LAO000356
Kentucky [1 6]	KY90010	South Carolina	84004002
Kentucky [2]	16	South Dakota	n/a
Louisiana	AI30792	Tennessee [1 4]	2006
Louisiana	LA018	Texas	T104704245-20-18
Maine	TN00003	Texas [5]	LAB0152
Maryland	324	Utah	TN000032021-11
Massachusetts	M-TN003	Vermont	VT2006
Michigan	9958	Virginia	110033
Minnesota	047-999-395	Washington	C847
Mississippi	TN00003	West Virginia	233
Missouri	340	Wisconsin	998093910
Montana	CERT0086	Wyoming	A2LA
A2LA – ISO 17025	1461.01	AIHA-LAP,LLC EMLAP	100789
A2LA – ISO 17025 [5]	1461.02	DOD	1461.01
Canada	1461.01	USDA	P330-15-00234
EPA–Crypto	TN00003		

[1] Drinking Water [2] Underground Storage Tanks [3] Aquatic Toxicity [4] Chemical/Microbiological [5] Mold [6] Wastewater n/a Accreditation not applicable

* Not all certifications held by the laboratory are applicable to the results reported in the attached report.

* Accreditation is only applicable to the test methods specified on each scope of accreditation held by Pace Analytical.

Company Name/Address: Rad Pros
14 Inverness Dr E A-220
Englewood CO, 80112

Billing Information: Rad Pros
14 Inverness Dr E
A-220
Englewood CO, 80112

Analysis / Container / Preservative

Chain of Custody Page ___ of ___

Pace
PEOPLE ADVANCING SCIENCE
12065 Lebanon Rd Mount Juliet, TN 37122
Phone: 615-758-5858 Alt: 800-767-5859
Submitting a sample via this chain of custody constitutes acknowledgment and acceptance of the Pace Terms and Conditions found at: https://info.pacelabs.com/hubfs/pas-standard-terms.pdf

Report to: Aiden Franklin

Email To: aiden.franklin@radpros.com

Project Description: Pond Sludge Sampling

City/State Collected: Louisville, CO

Please Circle: PT MT CT ET

SDG # LK884997

B120

Regulatory Program (COC,RCRA,DW,etc):

Client Project # FP-3573

Lab Project #

Collected by (print): Aiden Franklin

Site/Facility ID #

P.O. # FP-3573

Collected by (signature): [signature]

Immediately Packed on Ice N ___ Y X

Rush? (Lab MUST Be Notified)
___ Same Day ___ Five Day
___ Next Day ___ 5 Day (Rad Only)
___ Two Day ___ 10 Day (Rad Only)
___ Three Day ___ STD TaT

Quote #

Date Results Needed

Acctnum:
Template:
Prelogin:
PM:
PB:
Shipped Via:

Sample ID	Comp/Grab	Matrix*	Depth	Date	Time	No. of Cntrs	Ra-226	Ra-228	VOCs Totals	TCLP Metals RCRA 8	TCLP VOCs SVOCs	PCBs	pH	TOX	Total Uranium and Thorium	Remarks	Sample # (lab only)
FP-3573-01-N	COMP	SS		8/4/25		2	X	X	X	X	X	X	X	X	X		-01,02
FP-3573-02-N	↓	SS		↓		1	X	X									
FP-3573-03-N		SS				1	X	X									
FP-3573-01-S		SS				2	X	X	X	X	X	X	X	X	X		-03,04
FP-3573-02-S		SS				1	X	X									
FP-3573-03-S	↓	SS		↓		1	X	X									

* Matrix:
SS - Soil **AIR** - Air **F** - Filter
GW - Groundwater **B** - Bioassay
WW - WasteWater
DW - Drinking Water
OT - Other_____

Remarks:

pH _____ Temp _____
Flow _____ Other _____

Samples returned via:
__ UPS __ FedEx __ Courier __ _____

Tracking #

Sample Receipt Checklist
COC Seal Present/Intact: __NP Y Y __N
COC Signed/Accurate: __Y __N
Bottles arrive intact: __Y __N
Correct bottles used: __Y __N
Sufficient volume sent: __Y __N
If Applicable
VOA Zero Headspace: __Y __N
Preservation Correct/Checked: __Y __N
RAD Screen <0.5 mR/hr: Y Y __N

Relinquished by : (Signature)	Date:	Time:	Received by: (Signature)	Trip Blank Received: Yes / No HCL / MeoH TBR	
[signature]	8/4/25	14:00			
Relinquished by : (Signature)	Date:	Time:	Received by: (Signature)	Temp: °C 4.5-0.1-4.4	Bottles Received: 8	If preservation required by Login: Date/Time
Relinquished by : (Signature)	Date:	Time:	Received for lab by: (Signature) Christopher J. Gallen	Date: 8/5/25	Time: 0900	Hold:	Condition: NCF / OK

ANALYTICAL REPORT

September 04, 2025

1 Cp
2 Tc
3 Ss
4 Cn
5 Sr
6 Qc
7 Gl
8 Al
9 Sc

Radiation Pros LLC

Sample Delivery Group:	L1884997
Samples Received:	08/05/2025
Project Number:	FP-3573
Description:	Pond Sludge Sampling
Report To:	Aiden Franklin 14 Inverness Dr E Ste A 220 Englewood, CO 80112

Entire Report Reviewed By:

Donna Eidson
Project Manager

Results relate only to the items tested or calibrated and and are reported as rounded values. This test report shall not be reproduced, except in full, without written approval of the laboratory. Where applicable, sampling conducted by Pace Analytical National is performed per guidance provided in laboratory standard operating procedures ENV-SOP-MTJL-0067 and ENV-SOP-MTJL-0068. Where sampling conducted by the customer, results relate to the accuracy of the information provided, and as the samples are received.

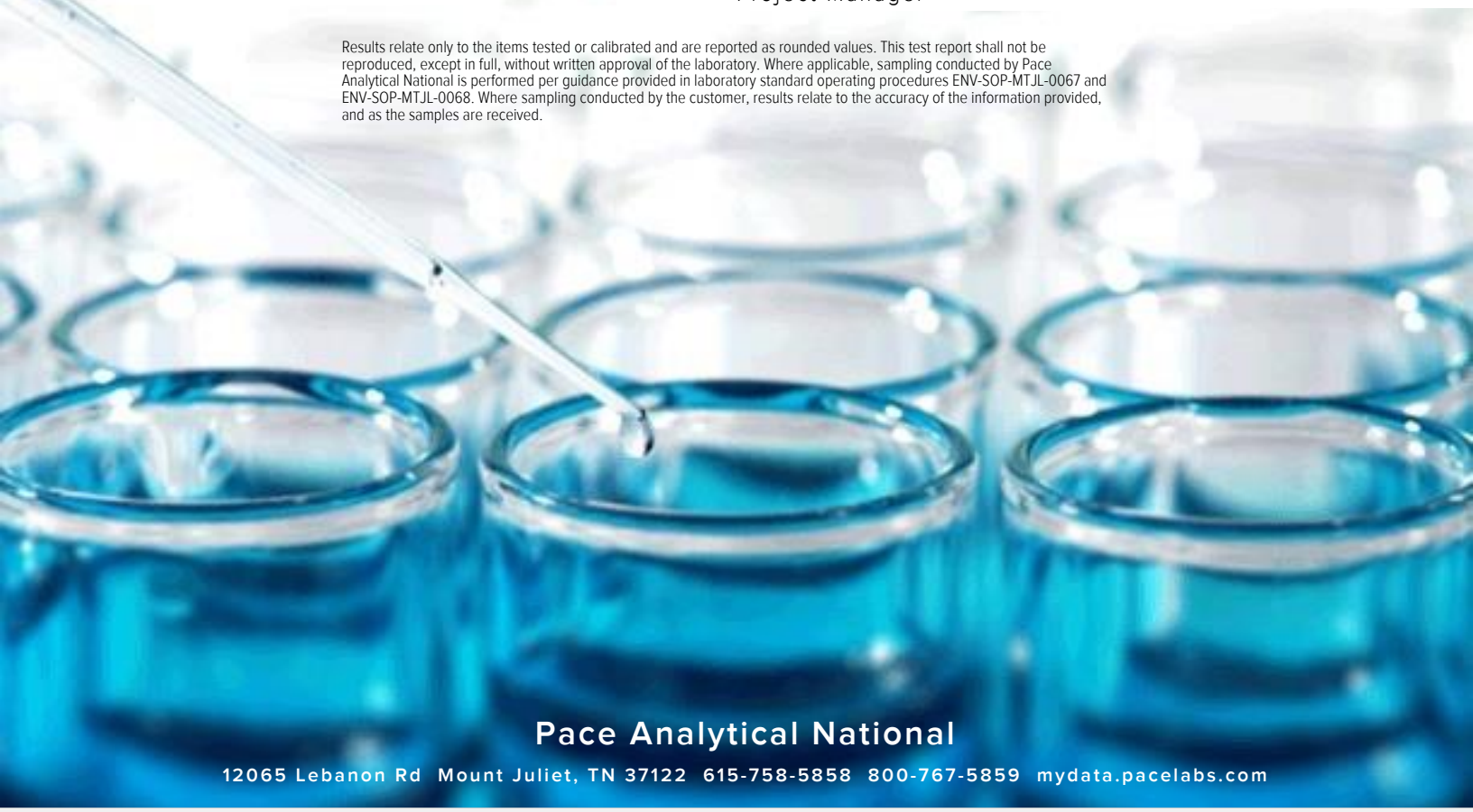

Pace Analytical National
12065 Lebanon Rd Mount Juliet, TN 37122 615-758-5858 800-767-5859 mydata.pacelabs.com

TABLE OF CONTENTS

Cp: Cover Page 1

Tc: Table of Contents 2

Ss: Sample Summary 3

Cn: Case Narrative 4

Sr: Sample Results 5

FP-3573-01-N L1884997-01 5

FP-3573-01-N L1884997-02 6

FP-3573-02-N L1884997-03 7

FP-3573-03-N L1884997-04 8

FP-3573-01-S L1884997-05 9

FP-3573-01-S L1884997-06 10

FP-3573-02-S L1884997-07 11

FP-3573-03-S L1884997-08 12

Qc: Quality Control Summary 13

Radiochemistry by Method DOE Ga-01-R/901.1 (21 day) 13

Metals (ICPMS) by Method 6020 14

Gl: Glossary of Terms 15

Al: Accreditations & Locations 16

Sc: Sample Chain of Custody 17

FP-3573-01-N L1884997-01

Collected by: Aiden Franklin | Collected date/time: 08/04/25 00:00 | Received date/time: 08/05/25 09:00

Method	Batch	Dilution	Preparation date/time	Analysis date/time	Analyst	Location
Radiochemistry by Method DOE Ga-01-R/901.1 (21 day)	WG2575423	1	08/05/25 16:59	08/27/25 13:04	ZRG	Mt. Juliet, TN

FP-3573-01-N L1884997-02

Collected by: Aiden Franklin | Collected date/time: 08/04/25 00:00 | Received date/time: 08/05/25 09:00

Method	Batch	Dilution	Preparation date/time	Analysis date/time	Analyst	Location
Metals (ICPMS) by Method 6020	WG2593147	.5	09/03/25 18:23	09/04/25 15:17	JPD	Mt. Juliet, TN

FP-3573-02-N L1884997-03

Collected by: Aiden Franklin | Collected date/time: 08/04/25 00:00 | Received date/time: 08/05/25 09:00

Method	Batch	Dilution	Preparation date/time	Analysis date/time	Analyst	Location
Radiochemistry by Method DOE Ga-01-R/901.1 (21 day)	WG2575423	1	08/05/25 16:59	08/27/25 13:00	ZRG	Mt. Juliet, TN

FP-3573-03-N L1884997-04

Collected by: Aiden Franklin | Collected date/time: 08/04/25 00:00 | Received date/time: 08/05/25 09:00

Method	Batch	Dilution	Preparation date/time	Analysis date/time	Analyst	Location
Radiochemistry by Method DOE Ga-01-R/901.1 (21 day)	WG2575423	1	08/05/25 16:59	08/27/25 13:01	ZRG	Mt. Juliet, TN

FP-3573-01-S L1884997-05

Collected by: Aiden Franklin | Collected date/time: 08/04/25 00:00 | Received date/time: 08/05/25 09:00

Method	Batch	Dilution	Preparation date/time	Analysis date/time	Analyst	Location
Radiochemistry by Method DOE Ga-01-R/901.1 (21 day)	WG2575423	1	08/05/25 16:59	08/27/25 13:02	ZRG	Mt. Juliet, TN

FP-3573-01-S L1884997-06

Collected by: Aiden Franklin | Collected date/time: 08/04/25 00:00 | Received date/time: 08/05/25 09:00

Method	Batch	Dilution	Preparation date/time	Analysis date/time	Analyst	Location
Metals (ICPMS) by Method 6020	WG2593147	.5	09/03/25 18:23	09/04/25 15:20	JPD	Mt. Juliet, TN

FP-3573-02-S L1884997-07

Collected by: Aiden Franklin | Collected date/time: 08/04/25 00:00 | Received date/time: 08/05/25 09:00

Method	Batch	Dilution	Preparation date/time	Analysis date/time	Analyst	Location
Radiochemistry by Method DOE Ga-01-R/901.1 (21 day)	WG2575423	1	08/05/25 16:59	08/27/25 13:02	ZRG	Mt. Juliet, TN

FP-3573-03-S L1884997-08

Collected by: Aiden Franklin | Collected date/time: 08/04/25 00:00 | Received date/time: 08/05/25 09:00

Method	Batch	Dilution	Preparation date/time	Analysis date/time	Analyst	Location
Radiochemistry by Method DOE Ga-01-R/901.1 (21 day)	WG2575423	1	08/05/25 16:59	08/27/25 13:03	ZRG	Mt. Juliet, TN

All sample aliquots were received at the correct temperature, in the proper containers, with the appropriate preservatives, and within method specified holding times, unless qualified or notated within the report. Where applicable, all MDL (LOD) and RDL (LOQ) values reported for environmental samples have been corrected for the dilution factor used in the analysis. All radiochemical sample results for solids are reported on a dry weight basis with the exception of tritium, carbon-14 and radon, unless wet weight was requested by the client. All Method and Batch Quality Control are within established criteria except where addressed in this case narrative, a non-conformance form or properly qualified within the sample results. By my digital signature below, I affirm to the best of my knowledge, all problems/anomalies observed by the laboratory as having the potential to affect the quality of the data have been identified by the laboratory, and no information or data have been knowingly withheld that would affect the quality of the data.

Donna Eidson
Project Manager

Radiochemistry by Method DOE Ga-01-R/901.1 (21 day)

Analyte	Result pCi/g	Qualifier	2 sigma CE + / -	TPU + / -	MDA pCi/g	Lc pCi/g	Analysis Date date / time	Batch
Actinium-228 (Ra-228)	0.640		0.296	0.296	0.591	0.236	08/27/2025 13:04	WG2575423
Bismuth-214 (Ra-226)	0.270	J	0.172	0.172	0.300	0.125	08/27/2025 13:04	WG2575423
Radium-226 (186 KeV)	4.30		1.22	1.22	1.70	0.786	08/27/2025 13:04	WG2575423
Thorium-234 (U-238)	9.06		2.89	2.89	2.12	0.843	08/27/2025 13:04	WG2575423

Metals (ICPMS) by Method 6020

Analyte	Result mg/kg	Qualifier	RDL mg/kg	Dilution	Analysis date / time	Batch
Thorium	ND		2.50	.5	09/04/2025 15:17	WG2593147
Uranium	14.2		1.50	.5	09/04/2025 15:17	WG2593147

Radiochemistry by Method DOE Ga-01-R/901.1 (21 day)

Analyte	Result pCi/g	Qualifier	2 sigma CE + / -	TPU + / -	MDA pCi/g	Lc pCi/g	Analysis Date date / time	Batch
Actinium-228 (Ra-228)	0.780		0.179	0.179	0.288	0.126	08/27/2025 13:00	WG2575423
Bismuth-214 (Ra-226)	0.355		0.102	0.102	0.149	0.0664	08/27/2025 13:00	WG2575423
Radium-226 (186 KeV)	4.86		0.842	0.842	1.07	0.504	08/27/2025 13:00	WG2575423
Thorium-234 (U-238)	8.90		3.12	3.12	2.36	0.948	08/27/2025 13:00	WG2575423

Radiochemistry by Method DOE Ga-01-R/901.1 (21 day)

Analyte	Result pCi/g	Qualifier	2 sigma CE + / -	TPU + / -	MDA pCi/g	Lc pCi/g	Analysis Date date / time	Batch
Actinium-228 (Ra-228)	0.591	J	0.308	0.308	0.724	0.322	08/27/2025 13:01	WG2575423
Bismuth-214 (Ra-226)	0.473		0.169	0.169	0.251	0.108	08/27/2025 13:01	WG2575423
Radium-226 (186 KeV)	4.76		1.33	1.33	1.94	0.907	08/27/2025 13:01	WG2575423
Thorium-234 (U-238)	7.27		3.36	3.36	3.69	1.47	08/27/2025 13:01	WG2575423

Radiochemistry by Method DOE Ga-01-R/901.1 (21 day)

Analyte	Result pCi/g	Qualifier	2 sigma CE + / -	TPU + / -	MDA pCi/g	Lc pCi/g	Analysis Date date / time	Batch
Actinium-228 (Ra-228)	0.372		0.116	0.116	0.206	0.0887	08/27/2025 13:02	WG2575423
Bismuth-214 (Ra-226)	0.128		0.0726	0.0726	0.126	0.0564	08/27/2025 13:02	WG2575423
Radium-226 (186 KeV)	2.09		0.601	0.601	0.940	0.441	08/27/2025 13:02	WG2575423
Thorium-234 (U-238)	4.62		1.93	1.93	1.99	0.793	08/27/2025 13:02	WG2575423

Metals (ICPMS) by Method 6020

Analyte	Result mg/kg	Qualifier	RDL mg/kg	Dilution	Analysis date / time	Batch
Thorium	ND		2.50	.5	09/04/2025 15:20	WG2593147
Uranium	4.04		1.50	.5	09/04/2025 15:20	WG2593147

Radiochemistry by Method DOE Ga-01-R/901.1 (21 day)

Analyte	Result pCi/g	Qualifier	2 sigma CE + / -	TPU + / -	MDA pCi/g	Lc pCi/g	Analysis Date date / time	Batch
Actinium-228 (Ra-228)	0.760		0.212	0.212	0.304	0.117	08/27/2025 13:02	WG2575423
Bismuth-214 (Ra-226)	0.325		0.143	0.143	0.237	0.103	08/27/2025 13:02	WG2575423
Radium-226 (186 KeV)	4.96		0.947	0.947	1.03	0.466	08/27/2025 13:02	WG2575423
Thorium-234 (U-238)	8.13		3.00	3.00	1.93	0.748	08/27/2025 13:02	WG2575423

Radiochemistry by Method DOE Ga-01-R/901.1 (21 day)

Analyte	Result pCi/g	Qualifier	2 sigma CE + / -	TPU + / -	MDA pCi/g	Lc pCi/g	Analysis Date date / time	Batch
Actinium-228 (Ra-228)	0.857		0.221	0.221	0.319	0.130	08/27/2025 13:03	WG2575423
Bismuth-214 (Ra-226)	0.378		0.142	0.142	0.215	0.0948	08/27/2025 13:03	WG2575423
Radium-226 (186 KeV)	3.76		0.856	0.856	1.15	0.538	08/27/2025 13:03	WG2575423
Thorium-234 (U-238)	8.32		2.67	2.67	1.85	0.740	08/27/2025 13:03	WG2575423

QUALITY CONTROL SUMMARY

L1884997-01,03,04,05,07,08

Method Blank (MB)

(MB) R4264862-1 08/27/25 12:59

Analyte	MB Result pCi/g	MB Qualifier	MB 2 sigma CE + / -	MB MDA pCi/g	MB Lc pCi/g
Actinium-228 (Ra-228)	-0.160	U	0.202	0.583	0.254
Americium-241	0.0962	U	0.172	0.327	0.154
Bismuth-214 (Ra-226)	0.0887	U	0.156	0.309	0.137
Cesium-137	-0.0386	U	0.0717	0.158	0.0691
Cobalt-60	-0.00710	U	0.0440	0.171	0.0711
Radium-226 (186 KeV)	-0.0485	U	0.679	1.37	0.629
Thorium-234 (U-238)	1.18	J	0.891	2.02	0.803

L1884997-01 Original Sample (OS) • Duplicate (DUP)

(OS) L1884997-01 08/27/25 13:04 • (DUP) R4264862-2 08/27/25 14:07

Analyte	Original Result pCi/g	Original 2 sigma CE + / -	Original MDA pCi/g	Original Lc pCi/g	DUP Result pCi/g	DUP 2 sigma CE + / -	DUP MDA pCi/g	DUP Lc pCi/g	DUP RPD %	DUP RER	DUP Qualifier	DUP RPD Limits %	DUP RER Limit
Actinium-228 (Ra-228)	0.640	0.296	0.591	0.236	0.699	0.243	0.490	0.213	8.86	0.155		20	3
Bismuth-214 (Ra-226)	0.270	0.172	0.300	0.125	0.297	0.163	0.282	0.126	9.31	0.111		20	3
Radium-226 (186 KeV)	4.30	1.22	1.70	0.786	5.30	1.03	1.35	0.627	21.0	0.631		20	3
Thorium-234 (U-238)	9.06	2.89	2.12	0.843	10.7	3.41	2.17	0.870	16.7	0.369		20	3

Laboratory Control Sample (LCS) • Laboratory Control Sample Duplicate (LCSD)

(LCS) R4264862-3 08/27/25 14:07 • (LCSD) R4264862-4 08/27/25 14:31

Analyte	Spike Amount pCi/g	LCS Result pCi/g	LCSD Result pCi/g	LCS Rec. %	LCSD Rec. %	Rec. Limits %	LCS Qualifier	LCSD Qualifier	RPD %	RPD Limits %
Americium-241	36.9	33.7	37.6	91.2	102	80.0-120			11.0	20
Cesium-137	53.8	60.5	59.5	112	111	80.0-120			1.57	20
Cobalt-60	62.9	67.3	66.5	107	106	80.0-120			1.23	20

QUALITY CONTROL SUMMARY

L1884997-02,06

Method Blank (MB)

(MB) R4268768-1 09/04/25 14:54

Analyte	MB Result mg/kg	MB Qualifier	MB MDL mg/kg	MB RDL mg/kg
Thorium	U		0.515	25.0
Uranium	U		0.0478	15.0

Laboratory Control Sample (LCS)

(LCS) R4268768-2 09/04/25 14:57

Analyte	Spike Amount mg/kg	LCS Result mg/kg	LCS Rec. %	Rec. Limits %	LCS Qualifier
Thorium	100	105	105	80.0-120	
Uranium	100	109	109	80.0-120	

L1892716-02 Original Sample (OS) • Matrix Spike (MS) • Matrix Spike Duplicate (MSD)

(OS) L1892716-02 09/04/25 15:00 • (MS) R4268768-5 09/04/25 15:10 • (MSD) R4268768-6 09/04/25 15:14

Analyte	Spike Amount mg/kg	Original Result mg/kg	MS Result mg/kg	MSD Result mg/kg	MS Rec. %	MSD Rec. %	Dilution	Rec. Limits %	MS Qualifier	MSD Qualifier	RPD %	RPD Limits %
Thorium	100	ND	116	108	111	103	5	75.0-125			7.14	20
Uranium	100	ND	114	102	113	101	5	75.0-125			10.9	20

Guide to Reading and Understanding Your Laboratory Report

The information below is designed to better explain the various terms used in your report of analytical results from the Laboratory. This is not intended as a comprehensive explanation, and if you have additional questions please contact your project representative.

Results Disclaimer - Information that may be provided by the customer, and contained within this report, include Permit Limits, Project Name, Sample ID, Sample Matrix, Sample Preservation, Field Blanks, Field Spikes, Field Duplicates, On-Site Data, Sampling Collection Dates/Times, and Sampling Location. Results relate to the accuracy of this information provided, and as the samples are received.

Abbreviations and Definitions

MDA	Minimum Detectable Activity.
MDL	Method Detection Limit.
ND	Not detected at the Reporting Limit (or MDL where applicable).
RDL	Reported Detection Limit.
Rec.	Recovery.
RER	Replicate Error Ratio.
TPU	Total Propagated Uncertainty reported at 2 sigma (counting error plus all measurable variables).
Lc	Decision Level or Critical Level. DOE required Detection limit at a 68% confidence level.
RPD	Relative Percent Difference.
SDG	Sample Delivery Group.
U	Not detected at the Reporting Limit (or MDL where applicable).
Analyte	The name of the particular compound or analysis performed. Some Analyses and Methods will have multiple analytes reported.
Dilution	If the sample matrix contains an interfering material, the sample preparation volume or weight values differ from the standard, or if concentrations of analytes in the sample are higher than the highest limit of concentration that the laboratory can accurately report, the sample may be diluted for analysis. If a value different than 1 is used in this field, the result reported has already been corrected for this factor.
Limits	These are the target % recovery ranges or % difference value that the laboratory has historically determined as normal for the method and analyte being reported. Successful QC Sample analysis will target all analytes recovered or duplicated within these ranges.
Original Sample	The non-spiked sample in the prep batch used to determine the Relative Percent Difference (RPD) from a quality control sample. The Original Sample may not be included within the reported SDG.
Qualifier	This column provides a letter and/or number designation that corresponds to additional information concerning the result reported. If a Qualifier is present, a definition per Qualifier is provided within the Glossary and Definitions page and potentially a discussion of possible implications of the Qualifier in the Case Narrative if applicable.
Result	The actual analytical final result (corrected for any sample specific characteristics) reported for your sample. If there was no measurable result returned for a specific analyte, the result in this column may state “ND” (Not Detected) or “BDL” (Below Detectable Levels). The information in the results column should always be accompanied by either an MDL (Method Detection Limit) or RDL (Reporting Detection Limit) that defines the lowest value that the laboratory could detect or report for this analyte.
Uncertainty (Radiochemistry)	Confidence level of 2 sigma.
U (Radiochemistry)	Result + Error < MDA.
J (Radiochemistry)	Result < MDA; Result + Error > MDA.
Case Narrative (Cn)	A brief discussion about the included sample results, including a discussion of any non-conformances to protocol observed either at sample receipt by the laboratory from the field or during the analytical process. If present, there will be a section in the Case Narrative to discuss the meaning of any data qualifiers used in the report.
Quality Control Summary (Qc)	This section of the report includes the results of the laboratory quality control analyses required by procedure or analytical methods to assist in evaluating the validity of the results reported for your samples. These analyses are not being performed on your samples typically, but on laboratory generated material.
Sample Chain of Custody (Sc)	This is the document created in the field when your samples were initially collected. This is used to verify the time and date of collection, the person collecting the samples, and the analyses that the laboratory is requested to perform. This chain of custody also documents all persons (excluding commercial shippers) that have had control or possession of the samples from the time of collection until delivery to the laboratory for analysis.
Sample Results (Sr)	This section of your report will provide the results of all testing performed on your samples. These results are provided by sample ID and are separated by the analyses performed on each sample. The header line of each analysis section for each sample will provide the name and method number for the analysis reported.
Sample Summary (Ss)	This section of the Analytical Report defines the specific analyses performed for each sample ID, including the dates and times of preparation and/or analysis.

Qualifier	Description
J	The identification of the analyte is acceptable; the reported value is an estimate.
U	Below Detectable Limits: Indicates that the analyte was not detected.

Pace Analytical National 12065 Lebanon Rd Mount Juliet, TN 37122

Alabama	40660	Nebraska	NE-OS-15-05
Alaska	17-026	Nevada	TN000032021-1
Arizona	AZ0612	New Hampshire	2975
Arkansas	88-0469	New Jersey–NELAP	TN002
California	2932	New Mexico [1]	TN00003
Colorado	TN00003	New York	11742
Connecticut	PH-0197	North Carolina	Env375
Florida	E87487	North Carolina [1]	DW21704
Georgia	NELAP	North Carolina [3]	41
Georgia [1]	923	North Dakota	R-140
Idaho	TN00003	Ohio–VAP	CL0069
Illinois	200008	Oklahoma	9915
Indiana	C-TN-01	Oregon	TN200002
Iowa	364	Pennsylvania	68-02979
Kansas	E-10277	Rhode Island	LAO000356
Kentucky [1 6]	KY90010	South Carolina	84004002
Kentucky [2]	16	South Dakota	n/a
Louisiana	AI30792	Tennessee [1 4]	2006
Louisiana	LA018	Texas	T104704245-20-18
Maine	TN00003	Texas [5]	LAB0152
Maryland	324	Utah	TN000032021-11
Massachusetts	M-TN003	Vermont	VT2006
Michigan	9958	Virginia	110033
Minnesota	047-999-395	Washington	C847
Mississippi	TN00003	West Virginia	233
Missouri	340	Wisconsin	998093910
Montana	CERT0086	Wyoming	A2LA
A2LA – ISO 17025	1461.01	AIHA-LAP,LLC EMLAP	100789
A2LA – ISO 17025 [5]	1461.02	DOD	1461.01
Canada	1461.01	USDA	P330-15-00234
EPA–Crypto	TN00003		

[1] Drinking Water [2] Underground Storage Tanks [3] Aquatic Toxicity [4] Chemical/Microbiological [5] Mold [6] Wastewater n/a Accreditation not applicable

* Not all certifications held by the laboratory are applicable to the results reported in the attached report.

* Accreditation is only applicable to the test methods specified on each scope of accreditation held by Pace Analytical.

Company Name/Address: Rad Pros
14 Inverness Dr E A-220
Englewood CO, 80112

Billing Information: Rad Pros
14 Inverness Dr E
A-220
Englewood CO, 80112

Report to: Aiden Franklin

Email To: aiden.franklin@radpros.com

Project Description: Pond Sludge Sampling

City/State Collected: Louisville, CO

Please Circle: PT MT CT ET

Regulatory Program (COC,RCRA,DW,etc):

Client Project # FP-3573

Lab Project #

Collected by (print): Aiden Franklin

Site/Facility ID #

P.O. # FP-3573

Collected by (signature): [signature]

Immediately Packed on Ice N ___ Y X

Rush? (Lab MUST Be Notified)
___ Same Day ___ Five Day
___ Next Day ___ 5 Day (Rad Only)
___ Two Day ___ 10 Day (Rad Only)
___ Three Day ___ STD TaT

Quote #

Date Results Needed

Analysis / Container / Preservative

Chain of Custody Page ___ of ___

Pace
PEOPLE ADVANCING SCIENCE

12065 Lebanon Rd Mount Juliet, TN 37122
Phone: 615-758-5858 Alt: 800-767-5859

Submitting a sample via this chain of custody constitutes acknowledgment and acceptance of the Pace Terms and Conditions found at: https://info.pacelabs.com/hub/s/pas-standard-terms.pdf

SDG # L1884997

Table # B120

Acctnum:
Template:
Prelogin:
PM:
PB:
Shipped Via:

Sample ID	Comp/Grab	Matrix*	Depth	Date	Time	No. of Cntrs	Ra-226	Ra-228	VOCs Totals	TCLP Metals RCRA 8	TCLP VOCs SVOCs	PCBs	pH	TOX	Total Uranium and Thorium	Pres Chk	Remarks	Sample # (lab only)
FP-3573-01-N	COMP	SS		8/4/25		2	X	X	X	X	X	X	X	X	X			-01,02
FP-3573-02-N		SS				1	X	X										-03
FP-3573-03-N		SS				1	X	X										-04
FP-3573-01-S		SS				2	X	X	X	X	X	X	X	X	X			-05,06
FP-3573-02-S		SS				1	X	X										-07
FP-3573-03-S		SS				1	X	X										-08

* Matrix:
SS - Soil **AIR** - Air **F** - Filter
GW - Groundwater **B** - Bioassay
WW - WasteWater
DW - Drinking Water
OT - Other_____

Remarks:

pH _____ Temp _____
Flow _____ Other _____

Samples returned via:
__ UPS __ FedEx __ Courier _____

Tracking #

Sample Receipt Checklist
COC Seal Present/Intact: __NP X Y __N
COC Signed/Accurate: X Y __N
Bottles arrive intact: X Y __N
Correct bottles used: X Y __N
Sufficient volume sent: X Y __N
If Applicable
VOA Zero Headspace: __Y __N
Preservation Correct/Checked: __Y __N
RAD Screen <0.5 mR/hr: X Y __N

Relinquished by : (Signature)	Date:	Time:	Received by: (Signature)	Trip Blank Received: Yes / No HCL / MeoH TBR	
[signature]	8/4/25	14:00			
Relinquished by : (Signature)	Date:	Time:	Received by: (Signature)	Temp: °C 4.5-0.1=4.4	Bottles Received: 8	If preservation required by Login: Date/Time
Relinquished by : (Signature)	Date:	Time:	Received for lab by: (Signature) Christopher H. Gallen	Date: 8/5/25	Time: 0900	Hold:	Condition: NCF / OK

CITY OF LOUISVILLE, COLORADO

HOWARD BERRY
WATER TREATMENT PLANT
SOLIDS HANDLING IMPROVEMENTS

RECORD DRAWINGS
DECEMBER 2015

"THESE RECORD DRAWINGS HAVE BEEN PREPARED BASED ON INFORMATION PROVIDED BY OTHERS. THE ENGINEER HAS NOT VERIFIED THE ACCURACY OF THIS INFORMATION AND SHALL NOT BE RESPONSIBLE FOR ANY ERRORS OR OMISSIONS WHICH MAY BE INCORPORATED HEREIN AS A RESULT."

VICINITY MAP

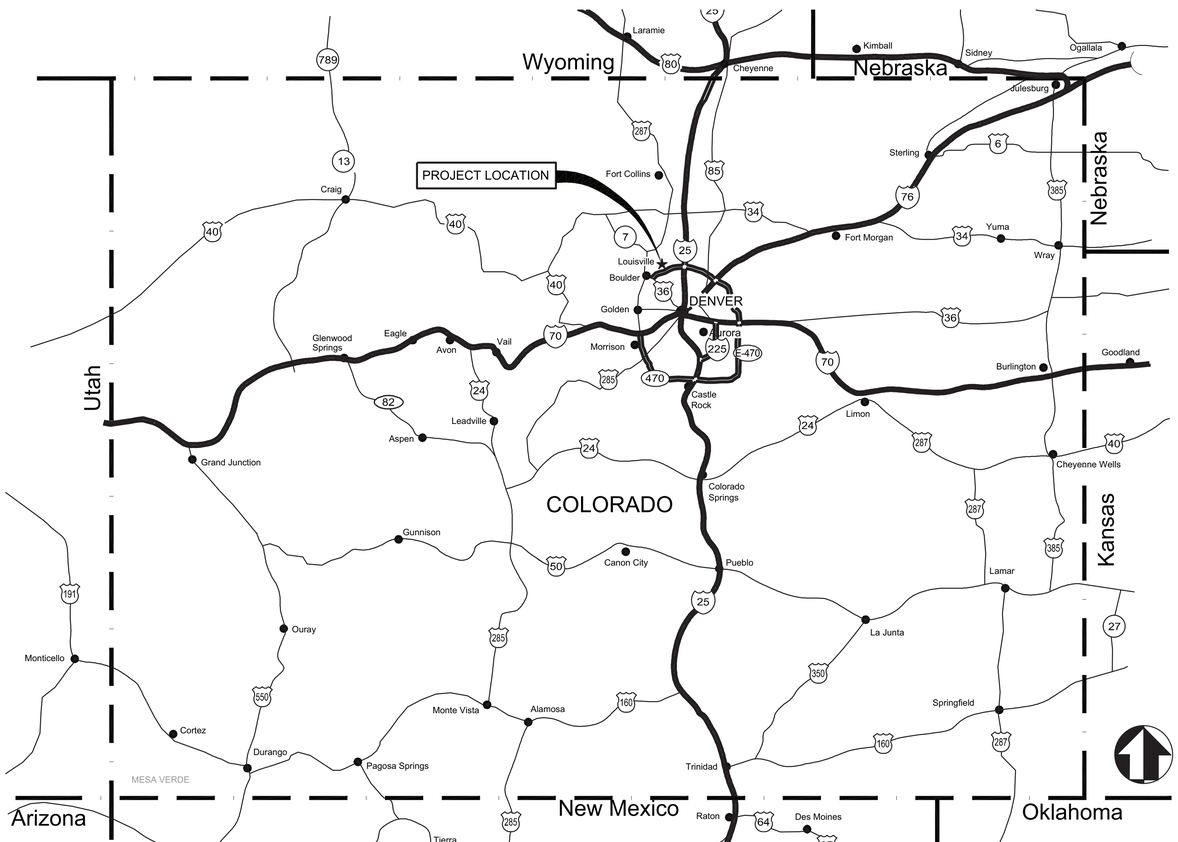

LOCATION MAP

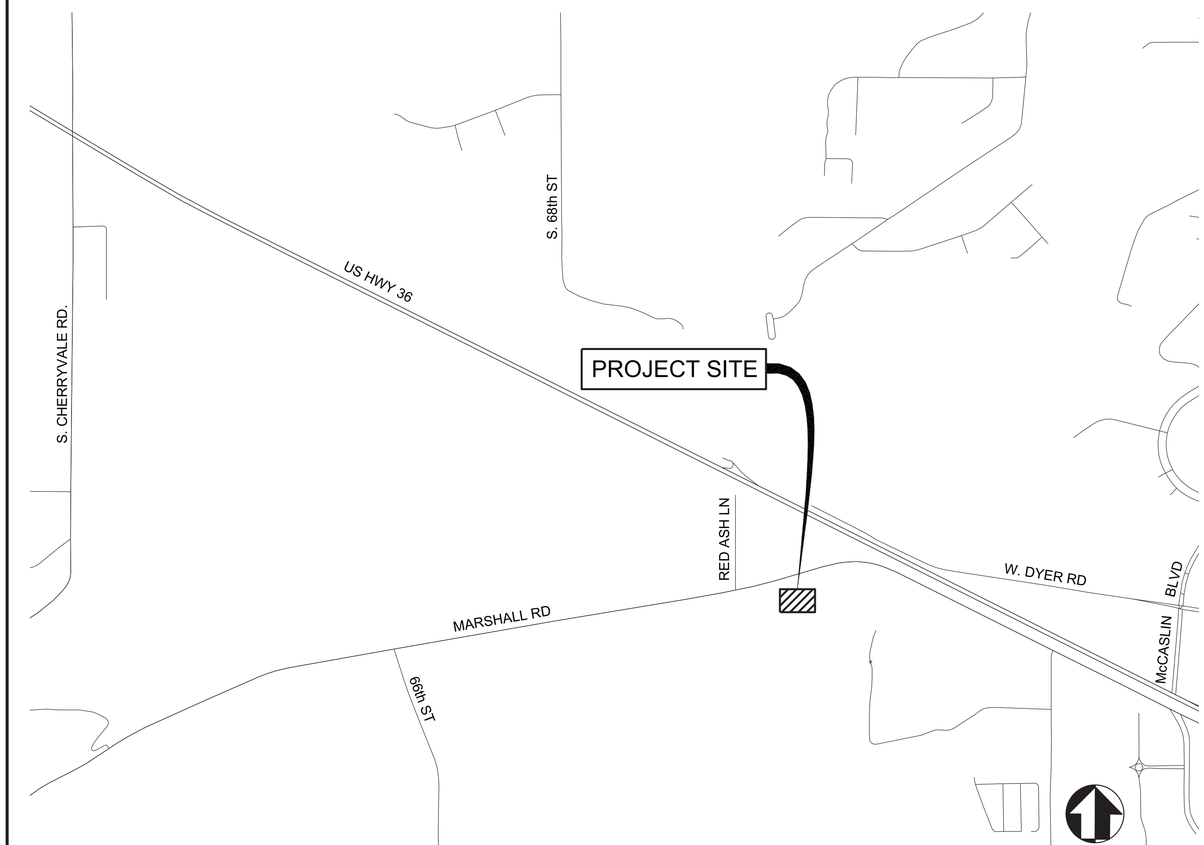

Hatch Mott MacDonald

143 Union Boulevard, Suite 1000
Lakewood, Colorado 80228

www.Hatchmott.com
Phone: 303.831.4700
FAX: 303.831.0290

NO.	DATE	REVISION	BY	CHK.
1	12 / 2015	RECORD DRAWINGS		

PROJECT NO. 336016

SHEET NO. G1

DWG. 1 OF 42

12/15/15 15:30 ARC56862 R19 P:\336016 - LOUISVILLE SOUTH WTP SOLIDS HANDLING\RECORD DRAWINGS\2-CEA\G1-COVER.DWG IMAGES: P:\336016 - LOUISVILLE SOUTH WTP SOLIDS HANDLING\XREF\SITE.JPG;

PIPE SCHEDULE

FLOW STREAM IDENTIFIER	SERVICE	INSTALLATION	PIPE SIZE	PIPE MATERIAL	WALL THICKNESS OR CLASS	INTERIOR LINING	TEST PRES. & TYPE	NOTES
FR	FILTRATE RETURN	EXPOSED	<3 IN	-	-	-	150 PSIG HYDRAULIC	
			≥3 IN	DIP	CL 53	CEMENT		
		BURIED	<3 IN	-	-	-		
			≥3 IN	DIP	CL 52	CEMENT		
OF	OVERFLOW	EXPOSED	<3 IN	-	-	-	50 PSIG HYDRAULIC	
			≥3 IN	-	-	-		
		BURIED	<3 IN	-	-	-		
			≥3 IN	DIP	CL 52	CEMENT		
PDR	PROCESS DRAIN	EXPOSED	<3 IN	-	-	-	15 PSIG HYDRAULIC	
			≥3 IN	DIP	CL 53	CEMENT		
		BURIED	<3 IN	-	-	-		
			≥3 IN	DIP	CL 52	CEMENT		
PW	PLANT WATER (POTABLE)	EXPOSED	<3 IN	-	-	-	150 PSIG HYDRAULIC	
			≥3 IN	-	-	-		
		BURIED	<3 IN	PVC	SCH 80	-		
			≥3 IN	-	-	-		
SWL	SLUDGE WASTE	EXPOSED	<4 IN	PVC	SCH 80	-	150 PSIG HYDRAULIC	
			≥4 IN	DIP	CL 53	CEMENT		
		BURIED	<3 IN	-	-	-		
			≥3 IN	DIP	CL 52	CEMENT		
UD	UNDERDRAIN	EXPOSED	<3 IN	-	-	-	NONE	
			≥3 IN	-	-	-		
		BURIED	<3 IN	-	-	-		
			≥3 IN	PE	-	-		

PIPE MATERIAL	SPECIFICATION SECTION
DIP	15062
PVC (PRESSURE)	15064

MODIFIERS:

BYP	BYPASS
D	DRAIN
OF	OVERFLOW
V	VENT (PROCESS)

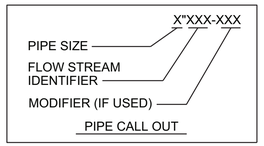

GENERAL NOTES:

1. MODIFIERS ARE USED TO DENOTE A SPECIFIC FUNCTION OF A PRIMARY SERVICE . PIPING IDENTIFIED WITH A MODIFIER SHALL BE THE SAME AS THE PRIMARY SERVICE UNLESS OTHERWISE NOTED.

DESIGN CRITERIA

SLUDGE DRYING BEDS

NUMBER OF BEDS	6
AVERAGE DRYING BED CYCLE TIME	6 MONTHS
SOLIDS PRODUCED SEDIMENTATION BASIN (TRAC-VAC)	500 LBS / DAY
TOTAL DRYING BED AREA	25,200 SF
CELL SIZE	4,200 SF
DRYING BED DEPTH	2.5 FT
CELL DIMENSIONS	150 FT x 28 FT

FILTRATE RECOVERY

NUMBER OF TANKS	1
TOTAL TANK VOLUME	161,500 GALLONS
OPERATING DEPTH	8 FEET
TANK DIMENSIONS	150 FT x 18 FT
FILTRATE RETURN PUMPS	
NUMBER	2
TYPE	SUBMERSIBLE NON-CLOG
CAPACITY (EACH)	600 GPM
HORSEPOWER (EACH)	20 HP

"THESE RECORD DRAWINGS HAVE BEEN PREPARED BASED ON INFORMATION PROVIDED BY OTHERS. THE ENGINEER HAS NOT VERIFIED THE ACCURACY OF THIS INFORMATION AND SHALL NOT BE RESPONSIBLE FOR ANY ERRORS OR OMISSIONS WHICH MAY BE INCORPORATED HEREIN AS A RESULT."

INDEX OF DRAWINGS

GENERAL

G1	1	of	42	COVER, LOCATION AND VICINITY MAPS
G2	2	of	42	INDEX OF DRAWINGS, PIPE SCHEDULE, DESIGN CRITERIA AND GENERAL NOTES
G3	3	of	42	PROCESS FLOW DIAGRAM
G4	4	of	42	SURVEY CONTROL PLAN
G5	5	of	42	ABBREVIATIONS

CIVIL

C1	6	of	42	CIVIL LEGEND
C2	7	of	42	OVERALL SITE PLAN AND LANDSCAPING PLAN
C3	8	of	42	YARD PIPING PLAN AT EXISTING PLANT
C4	9	of	42	DRYING BEDS GRADING AND YARD PIPING PLAN

STRUCTURAL

S1	10	of	42	STRUCTURAL GENERAL NOTES
S2	11	of	42	DRYING BEDS PLAN
S3	12	of	42	DRYING BEDS SECTIONS AND DETAILS
S4	13	of	42	DRYING BEDS SECTIONS AND DETAILS
S5	14	of	42	FILTRATE TANK PLANS
S6	15	of	42	FILTRATE TANK SECTIONS
S7	16	of	42	FILTRATE TANK SECTIONS
S8	17	of	42	FILTRATE TANK PLAN AND SECTION
S9	18	of	42	METER VAULT PLANS AND SECTIONS

PROCESS

P1	19	of	42	PROCESS LEGEND
P2	20	of	42	EXISTING PROCESS BUILDING LOWER LEVEL PLAN - NEW SLUDGE WASTE LINE
P3	21	of	42	EXISTING PROCESS BUILDING LOWER LEVEL SECTIONS - NEW SLUDGE WASTE LINE
P4	22	of	42	DRYING BEDS PLAN
P5	23	of	42	DRYING BEDS SECTIONS
P6	24	of	42	FILTRATE PUMP STATION PLAN AND SECTIONS
P7	25	of	42	FILTRATE TANK OVERFLOW CHANNEL PLAN AND SECTIONS
P8	26	of	42	DRYING BEDS SECTIONS AND DETAILS

ELECTRICAL

E1	27	of	42	SITE PLAN, LEGEND
E2	28	of	42	PROCESS BUILDING PLAN
E3	29	of	42	FILTRATE PUMP STATION PLAN
E4	30	of	42	ONE LINE DIAGRAMS, SCHEMATIC
E5	31	of	42	PLC ONE-LINE DIAGRAM, SCHEDULES
E6	32	of	42	SCHEDULES
E7	33	of	42	SCHEDULES

STANDARD DETAILS

D1	34	of	42	CIVIL DETAILS
D2	35	of	42	CIVIL DETAILS
D3	36	of	42	CIVIL DETAILS
D4	37	of	42	STRUCTURAL STANDARD DETAILS
D5	38	of	42	STRUCTURAL STANDARD DETAILS
D6	39	of	42	STRUCTURAL STANDARD DETAILS
D7	40	of	42	STRUCTURAL STANDARD DETAILS
D8	41	of	42	PROCESS DETAILS
D9	42	of	42	PROCESS DETAILS

GENERAL NOTES

1. ALL EXISTING UTILITIES MUST REMAIN IN SERVICE DURING AND AFTER CONSTRUCTION.
2. ALL EXISTING WATER VALVES SHALL ONLY BE OPERATED BY THE CITY.
3. SCHEDULE ALL EXISTING UTILITY LINE SHUTDOWNS WITH CITY.
4. ALL CONNECTIONS TO EXISTING MAINS, SERVICE LINES AND LATERALS SHALL BE MADE BY THE CONTRACTOR ONLY AFTER THE PROPOSED CONNECTION PROCEDURE AND WORK SCHEDULE HAS BEEN REVIEWED AND APPROVED BY THE ENGINEER AND OWNER. THE CONTRACTOR SHALL SUBMIT A WRITTEN REQUEST TO THE ENGINEER AND OWNER A MIN. OF FIVE (5) WORKING DAYS PRIOR TO SCHEDULING ANY CONNECTIONS. THE REQUEST SHALL OUTLINE THE FOLLOWING:
   A. POINTS OF CONNECTION, FITTINGS TO BE USED AND METHOD OF CONNECTION.
   B. ESTIMATED CONSTRUCTION TIME FOR THE CONNECTION.
   C. METHODS OF PROVIDING TEMPORARY SERVICES

   AFTER RECEIPT OF THE WRITTEN REQUEST THE OWNER SHALL REVIEW THE SUBMITTAL AND GIVE AN APPROVAL OR REJECTION OF THE REQUEST WITHIN THREE (3) WORKING DAYS. IF THE REQUEST IS REJECTED, RESUBMIT THE REQUEST, MAKING MODIFICATIONS IN A MANNER ACCEPTABLE TO THE OWNER. ALL CONNECTIONS SHALL ONLY BE MADE ON AGREED UPON DATE AND TIME. IF THE CONTRACTOR DOES NOT INITIATE AND COMPLETE THE CONNECTION WORK IN THE AGREED UPON MANNER, RESCHEDULE THE CONNECTION BY FOLLOWING THE PROCEDURE OUTLINED ABOVE. MAINS SHALL NOT BE PLACED IN SERVICE UNTIL CLEARANCE IS GRANTED BY OWNER AND ALL TESTING AND DISINFECTION OF LINES IS COMPLETE.
5. ALL PIPE SUPPORTS SHALL BE PROVIDED BY THE CONTRACTOR.
6. REPAIR OR REPLACEMENT WORK ON EXISTING UTILITIES, INCLUDING OVERHEAD POWER LINES AND POLES, SHALL BE PERFORMED BY THE UTILITY OWNER. ALL COSTS ASSOCIATED WITH REPAIR AND/OR REPLACEMENT OF EXISTING UTILITIES, DUE TO CONTRACTOR'S ACTIVITIES, SHALL BE THE RESPONSIBILITY OF THE CONTRACTOR.
7. ANY KNOWN SEWERS, WATER MAINS, TELEPHONE CONDUITS, ELECTRIC CABLES, AND OTHER UNDERGROUND STRUCTURES ARE SHOWN ON THE DRAWINGS ONLY TO THE EXTENT SUCH INFORMATION HAS BEEN MADE AVAILABLE OR DISCOVERED BY THE ENGINEER. IT IS EXPECTED THAT THERE MAY BE DISCREPANCIES AND OMISSIONS IN THE LOCATION AND QUANTITIES OF EXISTING UTILITIES AND STRUCTURES SHOWN. THIS INFORMATION IS SHOWN FOR THE CONVENIENCE OF THE CONTRACTOR BUT IS NOT GUARANTEED TO BE EITHER CORRECT OR COMPLETE AND ALL RESPONSIBILITY FOR THE ACCURACY AND COMPLETENESS THEREOF IS EXPRESSLY DISCLAIMED. THE CONTRACTOR SHALL MAKE SUCH INVESTIGATION AS NECESSARY TO VERIFY ITS CORRECTNESS AND COMPLETENESS.
8. UNLESS INDICATED OTHERWISE PROVIDE A MINIMUM 4.5 FEET EARTH COVER OVER BURIED LINES.

VERIFY SCALES
BAR IS ONE INCH ON ORIGINAL DRAWING.
0" 1"
IF NOT ONE INCH ON THIS DRAWING, ADJUST SCALES ACCORDINGLY.

NO.	DATE	REVISION	BY	CHK.
1	12 / 2015	RECORD DRAWINGS		

DESIGNED BY: RJA
DRAWN BY: JFA
CHECKED BY: RJA
DATE: FEBRUARY 2015

Hatch Mott MacDonald

CITY OF LOUISVILLE, COLORADO
HOWARD BERRY
WATER TREATMENT PLANT
SOLIDS HANDLING IMPROVEMENTS

INDEX OF DRAWINGS
PIPE SCHEDULE, DESIGN CRITERIA AND GENERAL NOTES

PROJECT NO. 336016
SHEET NO. G2
DWG. 2 OF 42

12/15/15 15:28 ARC36862 R19 P:\336016 - LOUISVILLE SOUTH WTP SOLIDS HANDLING\RECORD DRAWINGS\2-GEN\G2-SHEET LIST-PIPSCHED.DWG XREFS: P:\336016 - LOUISVILLE SOUTH WTP SOLIDS HANDLING\RECORD DRAWINGS\1-XREF\X-TITLE.DWG;

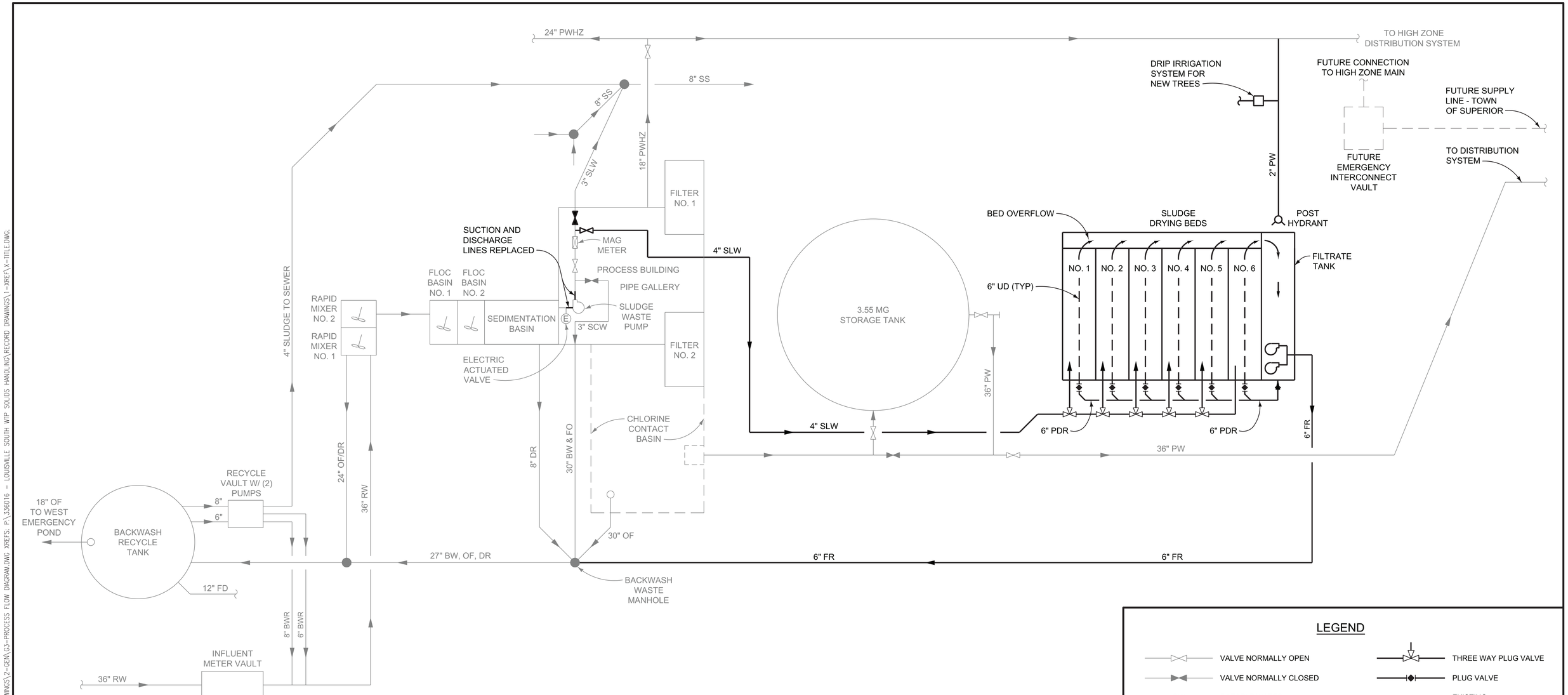

LEGEND

	VALVE NORMALLY OPEN		THREE WAY PLUG VALVE
	VALVE NORMALLY CLOSED		PLUG VALVE
PW	POTABLE WATER		EXISTING
PWHZ	POTABLE WATER HIGH ZONE		NEW
SS	SANITARY SEWER	FR	FILTRATE RETURN
SLW	SLUDGE WASTE	DR	DRAIN
UD	UNDERDRAIN	OF	OVERFLOW
PDR	PROCESS DRAIN		GRAVITY LINE MANHOLE
BW	BACKWASH WASTE		
RW	RAW WATER		
FM	FORCE MAIN		
FD	FILTER DRAIN		
FO	FILTER OVERFLOW		
BWR	BACKWASH RETURN		

"THESE RECORD DRAWINGS HAVE BEEN PREPARED BASED ON INFORMATION PROVIDED BY OTHERS. THE ENGINEER HAS NOT VERIFIED THE ACCURACY OF THIS INFORMATION AND SHALL NOT BE RESPONSIBLE FOR ANY ERRORS OR OMISSIONS WHICH MAY BE INCORPORATED HEREIN AS A RESULT."

VERIFY SCALES
BAR IS ONE INCH ON ORIGINAL DRAWING.
0" 1"
IF NOT ONE INCH ON THIS DRAWING, ADJUST SCALES ACCORDINGLY.

NO.	DATE	REVISION	BY	CHK.
1	12 / 2015	RECORD DRAWINGS		

DESIGNED BY: RJA
DRAWN BY: JFA
CHECKED BY: RJA
DATE: FEBRUARY 2015

Hatch Mott MacDonald

CITY OF LOUISVILLE, COLORADO
HOWARD BERRY
WATER TREATMENT PLANT
SOLIDS HANDLING IMPROVEMENTS

PROCESS FLOW DIAGRAM

PROJECT NO. 336016
SHEET NO. G3
DWG. 3 OF 42

12/15/15 15:27 ARC36862 R19 P:\336016 - LOUISVILLE SOUTH WTP SOLIDS HANDLING\RECORD DRAWINGS\2-GEN\G3-PROCESS FLOW DIAGRAM.DWG XREFS: P:\336016 - LOUISVILLE SOUTH WTP SOLIDS HANDLING\RECORD DRAWINGS\1-XREF X-TITLE.DWG

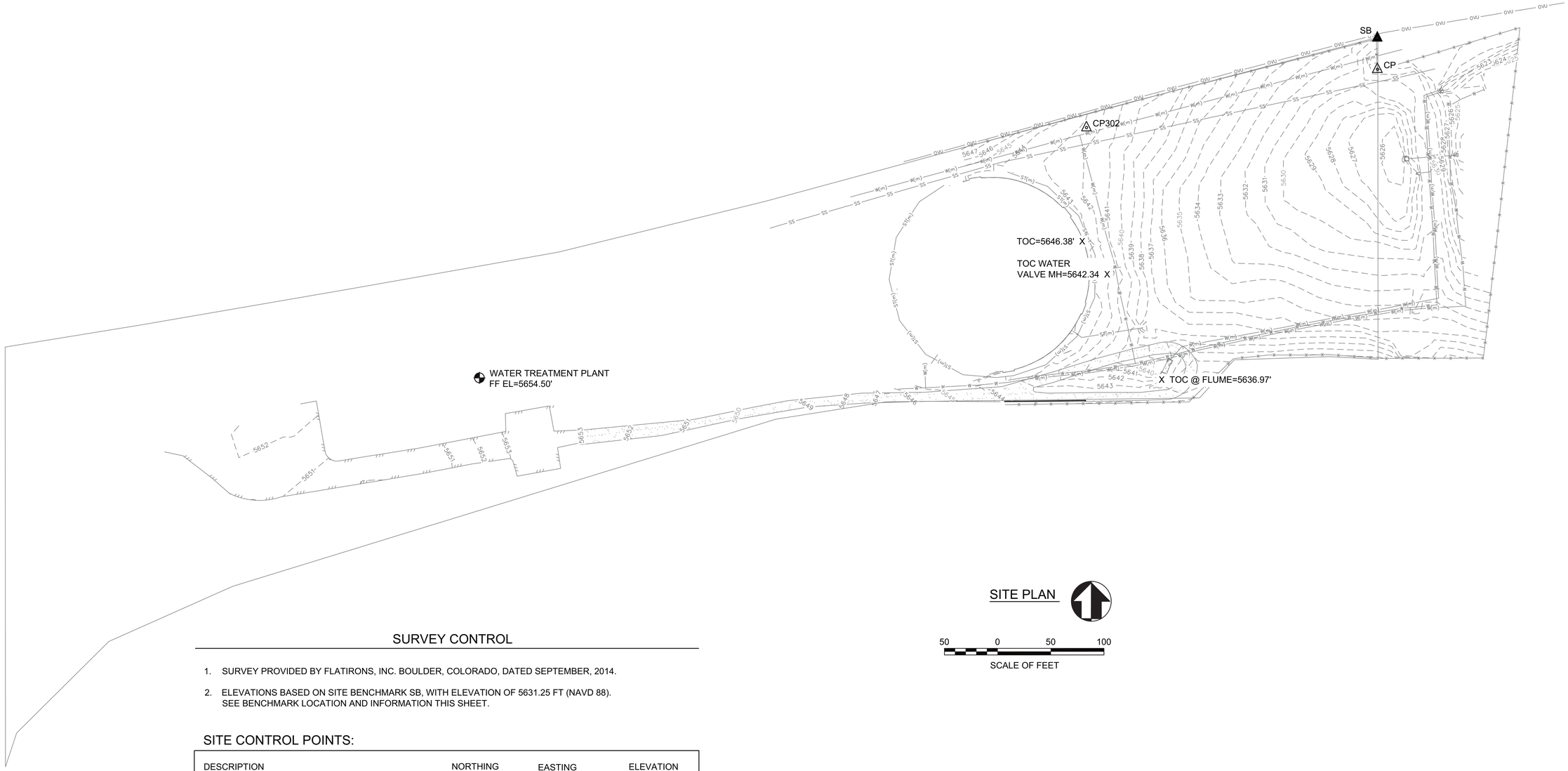

SITE PLAN

50 0 50 100

SCALE OF FEET

SURVEY CONTROL

1. SURVEY PROVIDED BY FLATIRONS, INC. BOULDER, COLORADO, DATED SEPTEMBER, 2014.
2. ELEVATIONS BASED ON SITE BENCHMARK SB, WITH ELEVATION OF 5631.25 FT (NAVD 88). SEE BENCHMARK LOCATION AND INFORMATION THIS SHEET.

SITE CONTROL POINTS:

DESCRIPTION	NORTHING	EASTING	ELEVATION
CP - 1 1/4" YELLOW PLASTIC CAP MARKED "RML, 9329"	N=1775920.59	E=3088396.90	ELEV=5628.50
SB - 1 1/4" YELLOW PLASTIC CAP MARKED "RML, 9329"	N=1775950.57	E=3088396.85	ELEV=5631.25
CP - 302 RED PLASTIC CAP	N=1775874.90	E=3088123.54	ELEV=5642.20

LEGEND

CP CONTROL POINT

SB SITE BENCH MARK

"THESE RECORD DRAWINGS HAVE BEEN PREPARED BASED ON INFORMATION PROVIDED BY OTHERS. THE ENGINEER HAS NOT VERIFIED THE ACCURACY OF THIS INFORMATION AND SHALL NOT BE RESPONSIBLE FOR ANY ERRORS OR OMISSIONS WHICH MAY BE INCORPORATED HEREIN AS A RESULT."

VERIFY SCALES

BAR IS ONE INCH ON ORIGINAL DRAWING.

0" 1"

IF NOT ONE INCH ON THIS DRAWING, ADJUST SCALES ACCORDINGLY.

NO.	DATE	REVISION	BY	CHK.
1	12 / 2015	RECORD DRAWINGS		

DESIGNED BY: RJA
DRAWN BY: JFA
CHECKED BY: RJA
DATE: FEBRUARY 2015

Hatch Mott MacDonald

CITY OF LOUISVILLE, COLORADO
HOWARD BERRY
WATER TREATMENT PLANT
SOLIDS HANDLING IMPROVEMENTS

SURVEY CONTROL PLAN

PROJECT NO. 336016
SHEET NO. G4
DWG. 4 OF 42

XREFS: P:\336016 - LOUISVILLE SOUTH WTP SOLIDS HANDLING\RECORD DRAWINGS\1-XREF\X-TITLE.DWG, P:\336016 - LOUISVILLE SOUTH WTP SOLIDS HANDLING\1-XREF\6297-TOPO (CLIENT).DWG, 12/21/15 10:43 ARCS6862 R19 P:\336016 - LOUISVILLE SOUTH WTP SOLIDS HANDLING\RECORD DRAWINGS\2-CEN\G4 - SURVEY CONTROL.DWG

ABBREVIATIONS

@	AT
AB	ANCHOR BOLT
AC	ASBESTOS CEMENT
ADA	AMERICANS WITH DISABILITIES ACT
ADJ	ADJUSTABLE, ADJACENT
AFF	ABOVE FINISHED FLOOR
AGGR	AGGREGATE
AH	AHEAD
AHR	ANCHOR
ALTN	ALTERNATE
ALUM, AL	ALUMINUM
AP	AERIAL POWER
APPROX	APPROXIMATE, APPROXIMATELY
APVD	APPROVED
ARCH	ARCHITECT, ARCHITECTURAL
ARV	AIR RELEASE VALVE
AT	AERIAL TELEPHONE
ASTM	AMERICAN SOCIETY OF TESTING AND MATERIALS
AUTO	AUTOMATIC
AUX	AUXILIARY
AVRV	AIR & VACUUM RELEASE VALVE
AWS	AMERICAN WELDING SOCIETY
B	BOTTOM
BC	BRASS CAP, BOTTOM OF CURB
BD	BOARD
BF	BLIND FLANGE, BOTTOM FACE
BFV	BUTTERFLY VALVE
BK	BACK
BLDG	BUILDING
BLK	BLOCK
BLKG	BLOCKING
BM	BENCH MARK, BEAM
BO	BOTTOM OF
BOC	BOTTOM OF CONCRETE
BOF	BOTTOM OF FOOTING
BOS	BOTTOM OF STEEL
BOT	BOTTOM
BRG	BEARING
BRK	BRICK, BREAK
BTWN	BETWEEN
BU	BELL UP
BUR	BUILT UP ROOFING
BW	BOTTOM OF WALL
^{o}C	DEGREE CELSIUS
C TO C	CENTER TO CENTER
C & G	CURB AND GUTTER
CB	CATCH BASIN
CDOT	COLORADO DEPARTMENT OF TRANSPORTATION
CFM	CUBIC FEET PER MINUTE
CFS	CUBIC FEET PER SECOND
CHEM	CHEMICAL
CI	CAST IRON PIPE
CJ	CONSTRUCTION / CONTROL JOINT
CL	CLASS, CENTERLINE
CLG	CEILING
CLR	CLEAR
℄	CENTERLINE
CMP	CORRUGATED METAL PIPE
CMT	CEMENT, CERAMIC MOSAIC TILE
CMU	CONCRETE MASONRY UNIT
CO	CLEANOUT
COL	COLUMN
CONC	CONCRETE
CONN	CONNECTION
CONST	CONSTRUCTION
CONT	CONTINUOUS
COORD	COORDINATE
COP	COPPER
CORR	CORRIDOR
CPLG	COUPLING
CPT	CARPET
CTR	CENTER
CU	COPPER
CU FT	CUBIC FEET
CU IN	CUBIC INCH
CVR PLS	COVER PLATES
CWT	CERAMIC WALL TILE
△	DELTA (ANGLE)
d_b	BAR DIAMETER
D	DRAIN, DIFFUSER
DBA	DEFORMED BAR ANCHOR
DBL	DOUBLE
DET	DETAIL
DF	DRINKING FOUNTAIN
DI	DUCTILE IRON PIPE, DROP INLET
DIA	DIAMETER
DIAG	DIAGONAL
DIM	DIMENSION
DIR	DIRECTION
DIST	DISTANCE
DN	DOWN
DP	DAMPPROOFING
DR	DOOR
DW	DISHWASHER
DWG	DRAWING

E	ENERGY
(E)	EPOXY COATED REINFORCING
EA	EACH
ECC	ECCENTRIC
EF	EACH FACE
EJ	EXPANSION JOINT
EL	ELEVATION
ENGR	ENGINEER
ELB	ELBOW
ELEC	ELECTRIC, ELECTRICAL
EOP	EDGE OF PAVEMENT
EQ	EQUIVALENT, EQUATION
EQPT	EQUIPMENT
EQL SP	EQUALLY SPACED
EW	EACH WAY
EXP	EXPOSED
EXP JT	EXPANSION JOINT
EXP MTL	EXPANSION MATERIAL
EX	EXISTING
EXT	EXTERIOR
FC	FLEXIBLE COUPLING
FCA	FLANGED COUPLING ADAPTER
FD	FLOOR DRAIN
FDN	FOUNDATION
FE	FIRE EXTINGUISHER
FEC	FIRE EXTINGUISHER CABINET
FF	FINISHED FLOOR
FG	FINISHED GRADE
FH	FIRE HYDRANT
FIG	FIGURE
FIN	FINISHED
FL	FLOW LINE
FLASH	FLASHING
FLR	FLOOR
FLG	FLANGE
FRP	FIBERGLASS REINFORCED PLASTIC
FS	FAR SIDE
FT	FOOT, FEET
FTG	FOOTING
^{o}F	DEGREE FAHRENHEIT
FW	FINISHED WATER
G	GAS, GRILLE
GA	GAUGE
GAL	GALLON
GALV	GALVANIZED
GCO	GRADE CLEANOUT
GL	GLASS
GND	GROUND
GP	GUARD POST
GPD	GALLONS PER DAY
GPH	GALLONS PER HOUR
GPM	GALLONS PER MINUTE
GR	GRADE
GSP	GALVANIZED STEEL PIPE
GV	GATE VALVE
GVL	GRAVEL
GYP BD	GYPSUM BOARD
H	HEIGHT, HIGH
HAS	HEADED ANCHOR STUD
HB	HOSE BIB
HC	HOLLOW CORE
HD	HUB DRAIN, HEAD
HDR	HEADER
HDWR	HARDWARE
HGT, HT	HEIGHT
HM	HOLLOW METAL
HORIZ, HOR.	HORIZONTAL
HP	HORSEPOWER
HPG	HIGH POINT GROUT
HVAC	HEATING, VENTILATING & AIR CONDITIONING
HWL	HIGH WATER LEVEL
HWY	HIGHWAY
I & C	INSTRUMENTATION & CONTROL
ld	DEVELOPMENT LENGTH
ldh	STD HOOK DEV LENGTH
ID	INSIDE DIAMETER
IE	INVERT ELEVATION
IF	INSIDE FACE
IN	INCH
INT	INTERSECTION, INTERIOR
INV	INVERT, INTERIOR
JST	JOIST
JT	JOINT
KIT	KITCHEN
KW	KILOWATT

L	LENGTH, LONG
LAV	LAVATORY
LBS	POUNDS
LB/CU FT	POUNDS PER CUBIC FOOT
LF	LINEAR FEET
LH	LEFT HAND
LNTL	LINTEL
LOC	LOCATION
LONG	LONGITUDINAL
LWL	LOW WATER LEVEL
MATL, MAT	MATERIAL
MAX	MAXIMUM
MB	MACHINE BOLT
MCC	MOTOR CONTROL CENTER
MECH	MECHANICAL
MFR	MANUFACTURER
MGD	MILLION GALLONS PER DAY
MG/L	MILLIGRAMS PER LITER
MH	MANHOLE
MIN	MINIMUM
MISC	MISCELLANEOUS
MJ	MECHANICAL JOINT
MR	MOISTURE RESISTANT
MO	MID-ORDINATE / MASONRY OPENING
MSL	MEAN SEA LEVEL
MTD	MOUNTED
MTL	METAL
(N)	NEW
NF	NON-FREEZE
NIC	NOT IN CONTRACT
NO	NUMBER
NOM	NOMINAL
NPT	NATIONAL PIPE THREADS
NS	NEAR SIDE
NTS	NOT TO SCALE
OC	ON CENTER
OD	OUTSIDE DIAMETER
OF	OUTSIDE FACE
OPNG, OPG	OPENING
OPP	OPPOSITE
P	PAINT
PC	POINT OF CURVE
PCF	POUNDS PER CUBIC FOOT
PE	PLAIN END
PEP	POLYETHYLENE PIPE
PEPP	POLYETHYLENE PRESSURE PIPE
PERIM	PERIMETER
PI	POINT OF INTERSECTION
PJF	PREMOLDED JOINT FILLER
PL	PLATE
PLAS LAM	PLASTIC LAMINATE
PLF	POUNDS PER LINEAL FOOT
PLYWD	PLYWOOD
POB	POINT OF BEGINNING
PP	POWER POLE
PRCST	PRECAST
PREFIN	REFINISHED
PRESS	PRESSURE
PRI	PRIMARY
PROP	PROPERTY
PRV	PRESSURE REDUCING VALVE
PSF	POUNDS PER SQUARE FOOT
PSI	POUNDS PER SQUARE INCH
PSIG	POUNDS PER SQUARE INCH, GAUGE
PT	POINT OF TANGENCY
PTD	PAINTED
PVC	POLYVINYL CHLORIDE
PVI	POINT OF VERTICAL INTERSECTION
PVMT	PAVEMENT
R&R, R/R	REMOVE AND REPLACE
R, RAD	RADIUS, RISER, REGISTER
RB	RUBBER BASE
RC	REINFORCED CONCRETE
RCP	REINFORCED CONCRETE PIPE
RD	ROOF DRAIN, ROAD
REBAR	REINFORCING BAR
RED	REDUCER
REF, RE	REFER, REFERENCE
REINF	REINFORCING, REINFORCE
REQD	REQUIRED
RH	RIGHT HAND
RM	ROOM
RND	ROUND
RO	ROUGH OPENING
ROW	RIGHT OF WAY
RST	REINFORCING STEEL
RW	RAW WATER

S	SEWER, SLOPE
SAC	SUSPENDED ACOUSTICAL CEILING
SC	SOLID CORE
SL	SLOPE
SCFM	STANDARD CUBIC FEET PER MINUTE
SCHED	SCHEDULE
SECT	SECTION
SED	SEE ELECTRICAL DRAWINGS
SH, SHT	SHEET
SIM	SIMILAR
SFM	SEWAGE FORCE MAIN
SMD	SEE MECHANICAL DRAWINGS
SP	SPACE, SPACES
SPD	SEE PROCESS DRAWINGS
SPEC	SPECIFICATIONS
SPEC'D	SPECIFIED
SQ	SQUARE
SQ FT, SF	SQUARE FOOT
SQ IN	SQUARE INCH
SSD	SEE STRUCTURAL DRAWINGS
SST	STAINLESS STEEL
STA	STATION
STD	STANDARD
STL	STEEL
STRUCT	STRUCTURE, STRUCTURAL
SYMM	SYMMETRICAL
T	TREAD, TOP, TELEPHONE
TB	THRUST BLOCK
T&B	TOP AND BOTTOM
T&G	TONGUE AND GROOVE
TAN	TANGENT
TBM	TEMPORARY BENCH MARK
TC	TOP OF CONCRETE
TDH	TOTAL DYNAMIC HEAD
TECH	TECHNICAL
TEL	TELEPHONE
TEMP	TEMPERATURE
TF	TOP FACE
TH	TEST HOLE
THD`D	THREADED
THK	THICK (NESS)
TO	TOP OF
TOB	TOP OF BEAM
TOC	TOP OF CURB, CONCRETE
TOF	TOP OF FOOTING
TOM	TOP OF MASONRY BLOCK
TOP	TOP OF PIPE
TOPO	TOPOGRAPHY
TOS,TST	TOP OF STEEL
TOW	TOP OF WALL
TRANSV	TRANSVERSE
TS	CATHODIC PROTECTION TEST STATION
TYP	TYPICAL
TZ	TERRAZZO
UBC	UNIFORM BUILDING CODE
UNO	UNLESS NOTED OTHERWISE
UP	UNDERGROUND POWER
UT	UNDERGROUND TELEPHONE
UV	ULTRAVIOLET
V	VENT
VC	VERTICAL CURVE
VCP	VITRIFIED CLAY PIPE
VCT	VINYL COMPOSITION TILE
VERT	VERTICAL
VIF	VERIFY IN FIELD
VTR	VENT THROUGH PIPE
W/	WITH
W/O	WITHOUT
W	WIDE, WATER
WC	WATER CLOSET
WD	WOOD
WP	WORKING POINT, WATERPROOFING
WS	WATER STOP
WT	WEIGHT
WTP	WATER TREATMENT PLANT
WWTP	WASTEWATER TREATMENT PLANT
WWF	WELDED WIRE FABRIC
YD	YARD

NOTES:

THIS IS A STANDARD SHEET. THEREFORE, SOME ABBREVIATIONS APPEARING ON THIS SHEET MAY NOT BE USED. INDIVIDUAL DRAWINGS WITH ABBREVIATIONS TAKE PRECEDENCE OVER THIS SHEET.

SECTION OR DETAIL IDENTIFICATION

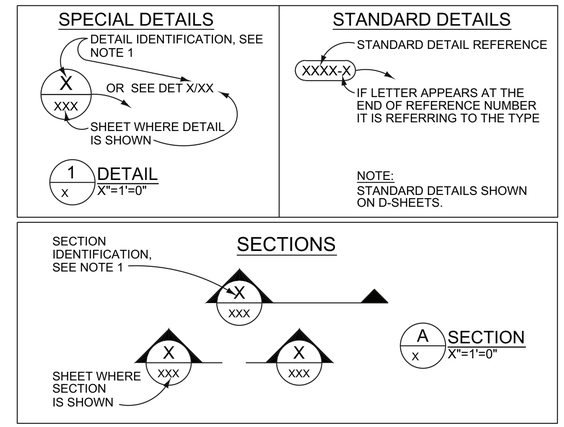

NOTE:
SECTIONS ARE LETTERED AND DETAILS ARE NUMBERED.

RELOCATED ITEMS

SHOWN SCREENED AND CALLED OUT AS RELOCATED

MATERIALS

- CONCRETE
- SAND, GROUT OR MORTAR
- STEEL
- ALUMINUM
- GRATING IN PLAN
- GRATING IN SECTION
- EARTH SURFACE
- LIQUID
- FUTURE
- DEMOLITION HATCH

"THESE RECORD DRAWINGS HAVE BEEN PREPARED BASED ON INFORMATION PROVIDED BY OTHERS. THE ENGINEER HAS NOT VERIFIED THE ACCURACY OF THIS INFORMATION AND SHALL NOT BE RESPONSIBLE FOR ANY ERRORS OR OMISSIONS WHICH MAY BE INCORPORATED HEREIN AS A RESULT."

VERIFY SCALES
BAR IS ONE INCH ON ORIGINAL DRAWING.
0" 1"
IF NOT ONE INCH ON THIS DRAWING, ADJUST SCALES ACCORDINGLY.

NO.	DATE	REVISION	BY	CHK.
1	12 / 2015	RECORD DRAWINGS		

DESIGNED BY: RJA
DRAWN BY: JFA
CHECKED BY: RJA
DATE: FEBRUARY 2015

Hatch Mott MacDonald

CITY OF LOUISVILLE, COLORADO
HOWARD BERRY
WATER TREATMENT PLANT
SOLIDS HANDLING IMPROVEMENTS

ABBREVIATIONS

PROJECT NO. 336016
SHEET NO. G5
DWG. 5 OF 42

12/15/15 15:26 ARC56862 R19 P:\336016 - LOUISVILLE SOUTH WTP SOLIDS HANDLING\RECORD DRAWINGS\2-GENG5-ABBREVIATIONS.DWG XREFS: P:\336016 - LOUISVILLE SOUTH WTP SOLIDS HANDLING\RECORD DRAWINGS\1-XREFX-TITLE.DWG;

CIVIL LEGEND

ROW	RIGHT-OF-WAY (ROW)
	GRAVEL SURFACE
	CONCRETE WALK
	PAVEMENT
	DRAINAGE DITCH
	ABANDON PIPE IN PLACE
	TEST HOLE
	PROPERTY CORNER MARKER
	SIGN
	HANDICAP RAMP
GP	GUARD POST
PP	POWER POLE
	FIRE HYDRANT
WV	GAS VALVE
GM	GAS METER
GR	GAS RISER
LP	LIGHT POLE
PP	POWER POLE
TP	TELEPHONE POLE
	WATER SPIGOT
WV	WATER VALVE
WM	WATER METER
WR	WATER RISER
WSP	SPRINKLER HEAD
TP-X	CONTROL POINT

SSCO	SANITARY SEWER CLEANOUT
SSMH	SANITARY SEWER MANHOLE
	DRAIN INLET
	MANHOLE OR METER VAULT
X X	FENCE
	CHAINLINK FENCE
	BLOCK WALL
	WOOD FENCE
	RAILROAD TIES (USED FOR LANDSCAPE)
EOC	EDGE OF CONCRETE
EOA	EDGE OF ASPHALT
	CENTERLINE
TOE	TOE OF SLOPE
TOB	TOP OF BANK
EOG	EDGE OF GRAVEL
RL RL RL	ROCK LINE
W	WATER
SS	SANITARY SEWER
T	TELEPHONE
UGE	UNDERGROUND ELECTRIC
OHE	OVERHEAD ELECTRIC
G	GAS
WSP 4935.26	SPRINKLER HEAD/SPOT ELEV.
x 4935.26	SPOT ELEVATION
XXX	MAJOR CONTOUR
	MINOR CONTOUR
XXX	EXISTING MAJOR CONTOUR
	EXISTING MINOR CONTOUR

	CHERRY TREE
	COTTONWOOD TREE
	PINON TREE
	ELM TREE
	PINE TREE
	BLUE SPRUCE TREE
	BUSH
	TREE (UNIDENTIFIED)
	JUNIPER TREE
	ALPINE TREE
	STUMP
	CEDAR
	WILLOW
	OAK
	TREELINE
EOP	EDGE OF PAVEMENT
E/M	EASEMENT
TOC	TOP OF CURB
	FLOW LINE
	SIDEWALK

"THESE RECORD DRAWINGS HAVE BEEN PREPARED BASED ON INFORMATION PROVIDED BY OTHERS. THE ENGINEER HAS NOT VERIFIED THE ACCURACY OF THIS INFORMATION AND SHALL NOT BE RESPONSIBLE FOR ANY ERRORS OR OMISSIONS WHICH MAY BE INCORPORATED HEREIN AS A RESULT."

VERIFY SCALES

BAR IS ONE INCH ON ORIGINAL DRAWING.

0" 1"

IF NOT ONE INCH ON THIS DRAWING, ADJUST SCALES ACCORDINGLY.

NO.	DATE	REVISION	BY	CHK.
1	12 / 2015	RECORD DRAWINGS		

DESIGNED BY: RJA
DRAWN BY: JFA
CHECKED BY: RJA
DATE: FEBRUARY 2015

Hatch Mott MacDonald

CITY OF LOUISVILLE, COLORADO
HOWARD BERRY
WATER TREATMENT PLANT
SOLIDS HANDLING IMPROVEMENTS

CIVIL LEGEND

PROJECT NO. 336016
SHEET NO. C1
DWG. 6 OF 42

12/15/15 15:26 ARC56862 R19 P:\336016 - LOUISVILLE SOUTH WTP SOLIDS HANDLING\RECORD DRAWINGS\3-CIVIL\C1-LEGEND.DWG XREFS: P:\336016 - LOUISVILLE SOUTH WTP SOLIDS HANDLING\RECORD DRAWINGS\1-XREF\X-TITLE.DWG;

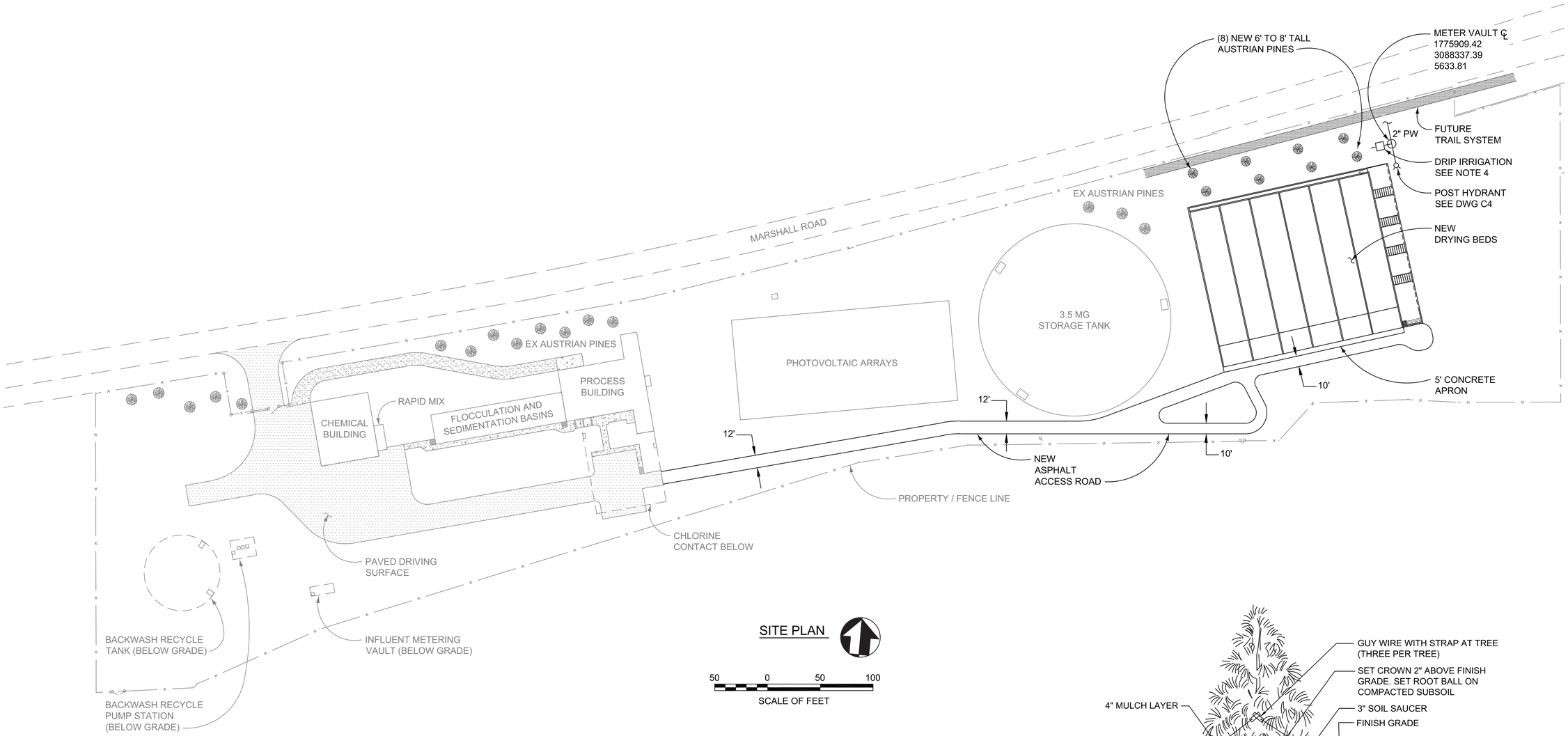

SITE PLAN

50 0 50 100

SCALE OF FEET

NOTES:

1. ALL DISTURBED AREAS TO BE VEGETATED WITH NATIVE GRASS.
2. COORDINATE FINAL LOCATIONS OF NEW TREES WITH CITY STAFF.
3. (8) NEW AUSTRIAN PINE TREE LOCATIONS TO BE COORDINATED WITH PROXIMITY OF BURIED UTILITIES AND FUTURE TRAIL. FINAL LOCATION OF TREES TO BE APPROVED BY CITY STAFF.
4. PROVIDE DRIP IRRIGATION SYSTEM FOR (8) AUSTRIAN PINES. DRIP IRRIGATION SYSTEM SHALL BE HUNTER 1-INCH DRIP ZONE CONTROL KIT INCLUDING IRRIGATION VALVE BOX, NODE-BATTERY OPERATOR CONTROLLER, (25) 2 GAL/HR POINT SOURCE EMITTERS, 200 LF OF 1" SCH 40 PVC PIPING, 50 LF OF 1/4" TUBING AND TUBING STAKES. DRIP IRRIGATION SYSTEM INSTALLED PER HUNTER STANDARD SPECIFICATIONS.

"THESE RECORD DRAWINGS HAVE BEEN PREPARED BASED ON INFORMATION PROVIDED BY OTHERS. THE ENGINEER HAS NOT VERIFIED THE ACCURACY OF THIS INFORMATION AND SHALL NOT BE RESPONSIBLE FOR ANY ERRORS OR OMISSIONS WHICH MAY BE INCORPORATED HEREIN AS A RESULT."

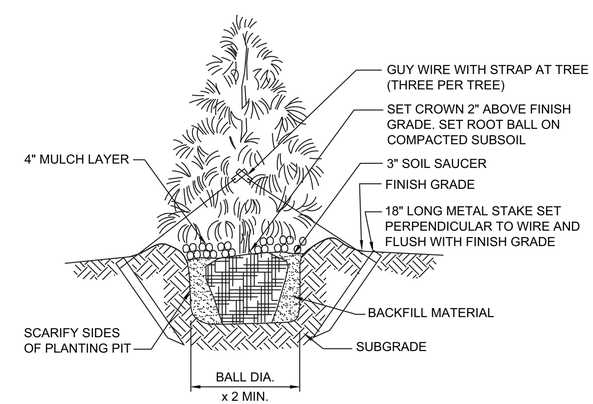

AUSTRIAN PINE TREE PLANTING DETAIL

NTS

VERIFY SCALES

BAR IS ONE INCH ON ORIGINAL DRAWING.

0" 1"

IF NOT ONE INCH ON THIS DRAWING, ADJUST SCALES ACCORDINGLY.

NO.	DATE	REVISION	BY	CHK.
1	12 / 2015	RECORD DRAWINGS		

DESIGNED BY: RJA
DRAWN BY: JFA
CHECKED BY: RJA
DATE: FEBRUARY 2015

Hatch Mott MacDonald

CITY OF LOUISVILLE, COLORADO
HOWARD BERRY
WATER TREATMENT PLANT
SOLIDS HANDLING IMPROVEMENTS

OVERALL SITE
AND LANDSCAPING PLAN

PROJECT NO. 336016
SHEET NO. C2
DWG. 7 OF 42

12/21/15 11:28 ARC56862 R19 P:\336016 - LOUISVILLE SOUTH WTP SOLIDS HANDLING\RECORD DRAWINGS\3-CIVIL\C2.DWG XREFS: P:\336016 - LOUISVILLE SOUTH WTP SOLIDS HANDLING\RECORD DRAWINGS\1-XREF\X-TITLE.DWG;

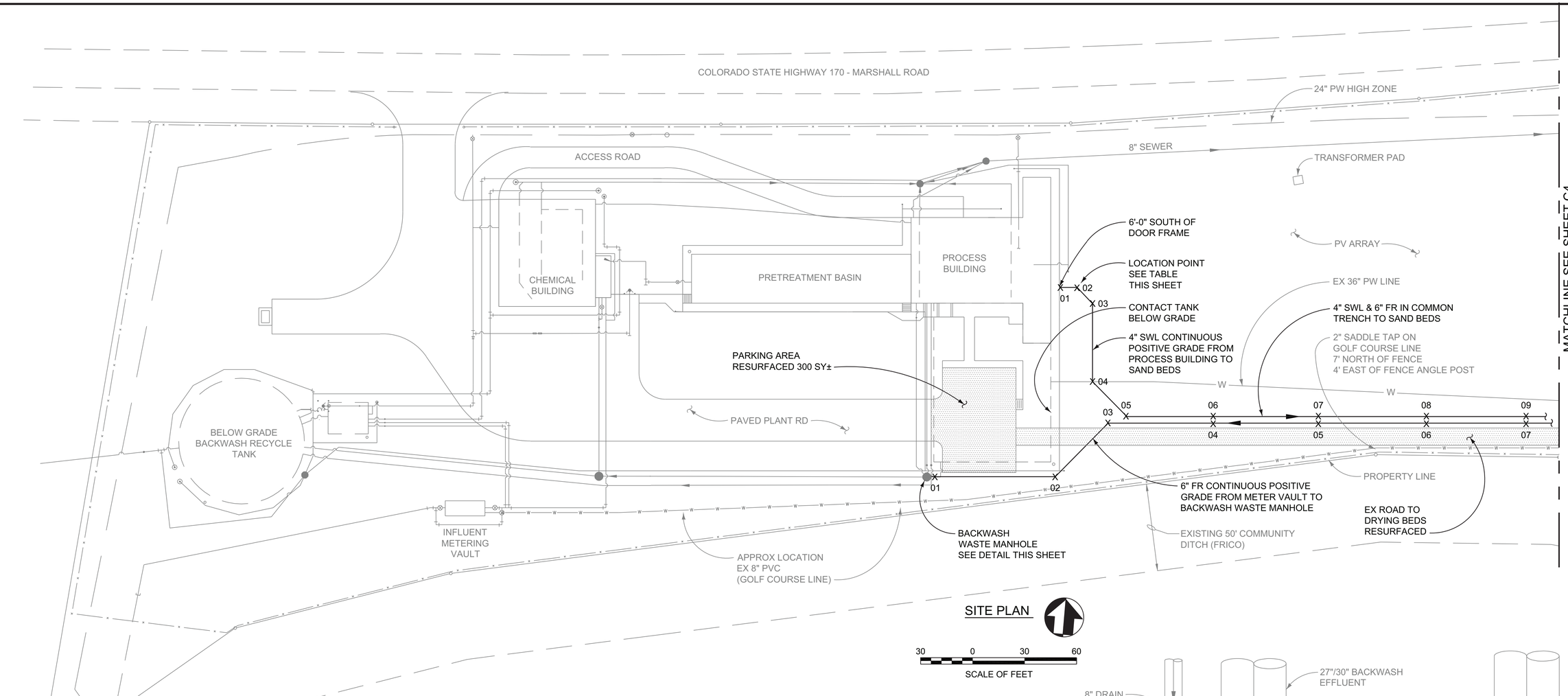

SITE PLAN

30 0 30 60
SCALE OF FEET

PIPE LOCATION TABLE

6" FR	NORTHING	EASTING	TOP OF PIPE ELEV.
01	1775534.43	3087581.82	5648.31
02	1775552.68	3087647.55	5647.62
03	1775589.36	3087668.40	5647.42
04	1775596.80	3087737.80	5646.53
05	1775602.96	3087797.91	5645.24
06	1775609.49	3087857.40	5643.98
07	1775612.88	3087918.02	5642.69
08	1775613.99	3087957.87	5641.83
4" SWL			
01	1775659.98	3087630.34	5649.75
02	1775663.04	3087649.53	5649.22
03	1775660.25	3087653.13	5649.07
04	1775605.91	3087661.99	5648.01
05	1775592.47	3087682.00	5647.42
06	1775598.78	3087736.06	5646.28
07	1775604.97	3087795.60	5645.10
08	1775611.63	3087855.32	5643.78
09	1775615.01	3087915.48	5642.59

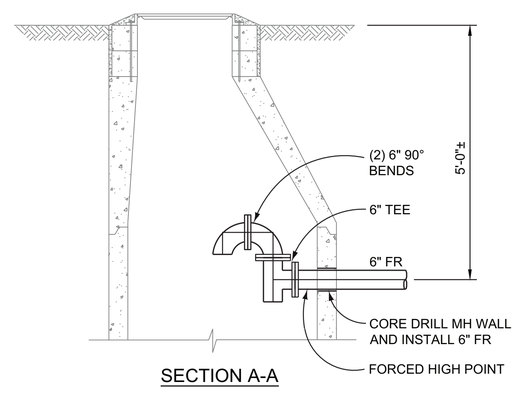

SECTION A-A

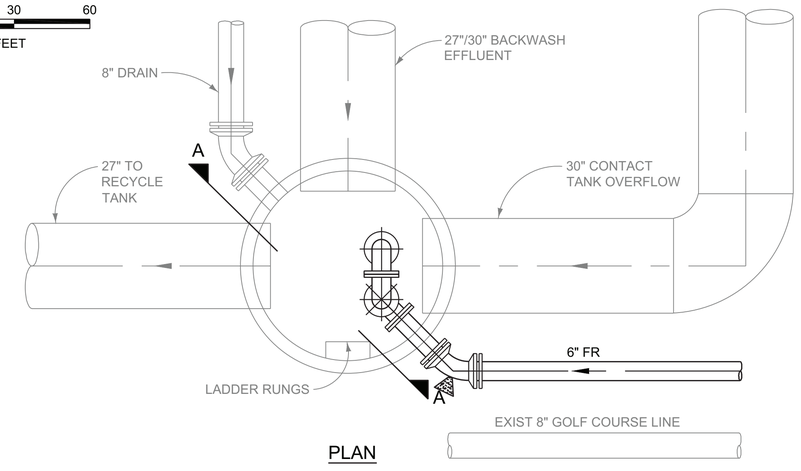

PLAN

BACKWASH WASTE MANHOLE - FILTRATE RETURN CONNECTION
1/2" = 1'-0"

"THESE RECORD DRAWINGS HAVE BEEN PREPARED BASED ON INFORMATION PROVIDED BY OTHERS. THE ENGINEER HAS NOT VERIFIED THE ACCURACY OF THIS INFORMATION AND SHALL NOT BE RESPONSIBLE FOR ANY ERRORS OR OMISSIONS WHICH MAY BE INCORPORATED HEREIN AS A RESULT."

VERIFY SCALES
BAR IS ONE INCH ON ORIGINAL DRAWING.
0" 1"
IF NOT ONE INCH ON THIS DRAWING, ADJUST SCALES ACCORDINGLY.

NO.	DATE	REVISION	BY	CHK.
1	12 / 2015	RECORD DRAWINGS		

DESIGNED BY: RJA
DRAWN BY: JFA
CHECKED BY: RJA
DATE: FEBRUARY 2015

Hatch Mott MacDonald

CITY OF LOUISVILLE, COLORADO
HOWARD BERRY
WATER TREATMENT PLANT
SOLIDS HANDLING IMPROVEMENTS

YARD PIPING PLAN
AT EXISTING PLANT

PROJECT NO. 336016
SHEET NO. C3
DWG. 8 OF 42

12/21/15 11:23 ARC56862 R19 P:\336016 - LOUISVILLE SOUTH WTP SOLIDS HANDLING\RECORD DRAWINGS\3-CIVIL\C3.DWG XREFS: P:\336016 - LOUISVILLE SOUTH WTP SOLIDS HANDLING\RECORD DRAWINGS\1-XREF\X-TITLE.DWG;

PIPE LOCATION TABLE

6" FR	NORTHING	EASTING	TOP OF PIPE ELEV.
08	1775613.99	3087957.87	5641.83
09	1775620.80	3088057.71	5639.02
10	1775622.44	3088073.00	5638.82
11	1775652.43	3088115.46	5637.37
12	1775712.14	3088367.36	5632.79

4" SWL			
10	1775616.09	3087955.45	5641.63
11	1775623.31	3088054.59	5640.78
12	1775626.20	3088072.32	5640.50

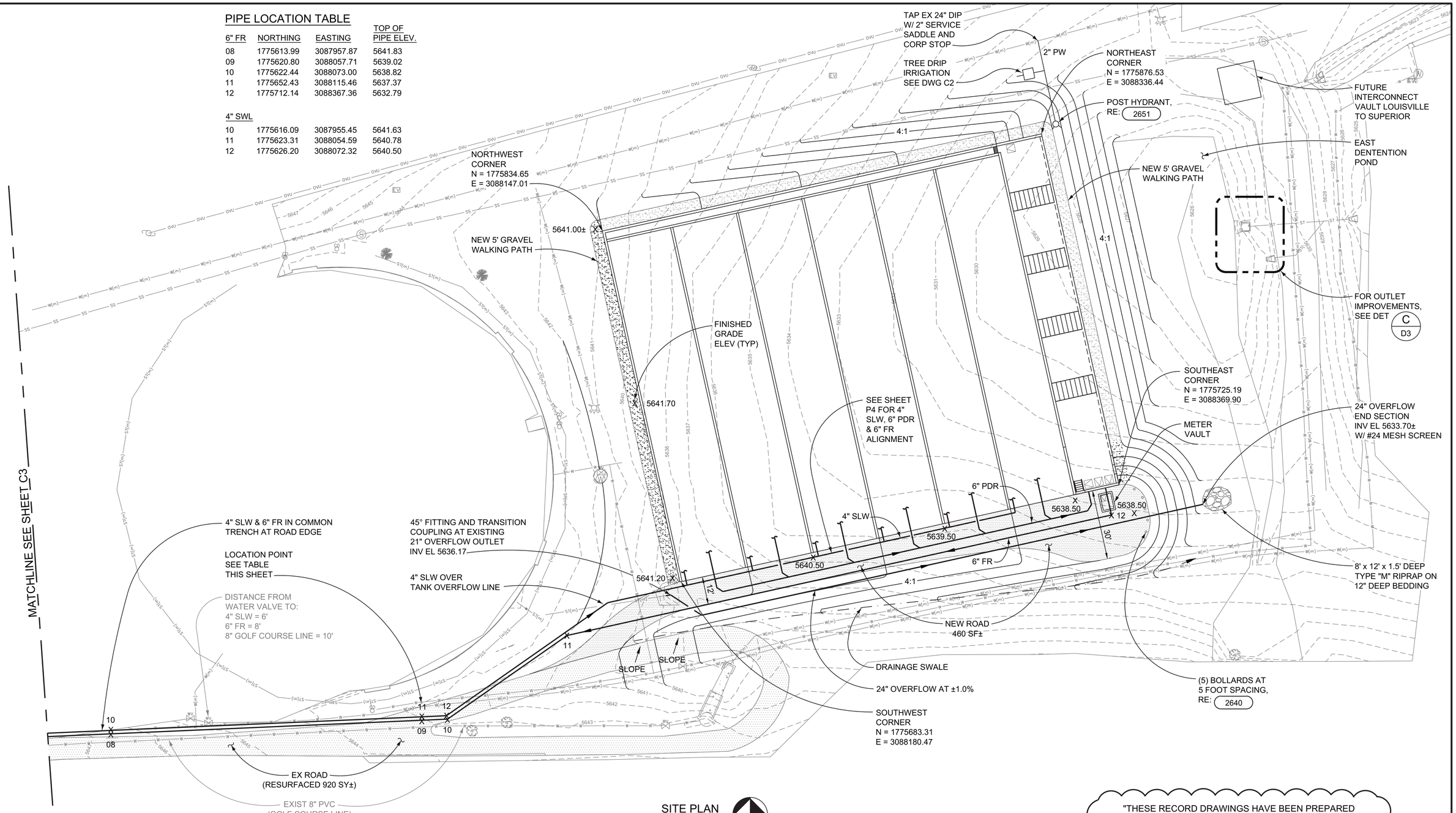

SITE PLAN

20 0 20 40

SCALE OF FEET

"THESE RECORD DRAWINGS HAVE BEEN PREPARED BASED ON INFORMATION PROVIDED BY OTHERS. THE ENGINEER HAS NOT VERIFIED THE ACCURACY OF THIS INFORMATION AND SHALL NOT BE RESPONSIBLE FOR ANY ERRORS OR OMISSIONS WHICH MAY BE INCORPORATED HEREIN AS A RESULT."

VERIFY SCALES
BAR IS ONE INCH ON ORIGINAL DRAWING.
0" 1"
IF NOT ONE INCH ON THIS DRAWING, ADJUST SCALES ACCORDINGLY.

NO.	DATE	REVISION	BY	CHK.
1	12 / 2015	RECORD DRAWINGS		

DESIGNED BY: RJA
DRAWN BY: JFA
CHECKED BY: RJA
DATE: FEBRUARY 2015

Hatch Mott MacDonald

CITY OF LOUISVILLE, COLORADO
HOWARD BERRY
WATER TREATMENT PLANT
SOLIDS HANDLING IMPROVEMENTS

DRYING BEDS
GRADING AND
YARD PIPING PLAN

PROJECT NO. 336016
SHEET NO. C4
DWG. 9 OF 42

12/21/15 11:38 ARC56862 R19 P:\336016 - LOUISVILLE SOUTH WTP SOLIDS HANDLING\RECORD DRAWINGS\3-CIVIL\C4.DWG XREFS: P:\336016 - LOUISVILLE SOUTH WTP SOLIDS HANDLING\RECORD DRAWINGS\1-XREF\X-TITLE.DWG;

I. GENERAL REQUIREMENTS:

1. STRUCTURAL DESIGN IS IN ACCORDANCE WITH THE INTERNATIONAL BUILDING CODE 2012, ASCE 7-10, AND ACI 350-06.
2. IN CASE OF DISAGREEMENT BETWEEN DRAWINGS AND SPECIFICATIONS, OR WITHIN EITHER DOCUMENT ITSELF, THE BETTER QUALITY OR GREATER QUANTITY SHALL BE USED UNLESS A WRITTEN CLARIFICATION IS ISSUED.
3. THE CONTRACTOR SHALL MAKE NOTE OF DISAGREEMENT OF STRUCTURE DIMENSIONS AND ELEVATIONS AND SHALL OBTAIN CORRECTIONS PRIOR TO PROCEEDING WITH CONSTRUCTION.
4. THE DRAWINGS REPRESENT THE COMPLETED STRUCTURE IN ITS FINAL CONDITION WITH ALL MEMBERS IN PLACE, CONNECTIONS COMPLETE, AND ALL AT THEIR SPECIFIED STRENGTH. PRIOR TO THIS, THE CONTRACTOR SHALL BE RESPONSIBLE FOR ALL TEMPORARY BRACING AND SHORING DURING CONSTRUCTION AND ERECTION FOR ANY AND ALL LOADS TO WHICH THE CONSTRUCTION IS SUBJECTED. JOB SITE SAFETY AND CONSTRUCTION PROCEDURES ARE THE RESPONSIBILITY OF THE CONTRACTOR.
5. CONTRACTOR SHALL COORDINATE WITH PROCESS, MECHANICAL, PLUMBING, ELECTRICAL AND ANY SPECIALTY DRAWINGS AS WELL AS EQUIPMENT FURNISHED FOR SIZE AND LOCATION OF ANCHOR BOLTS, OPENINGS, SLEEVES, CONCRETE PADS, CURBS, INSERTS, SLOPES, DEPRESSIONS, OR OTHER ITEMS THAT INTERFACE WITH THE STRUCTURE.
6. USE PERTINENT STANDARD DETAILS UNLESS NOTED OTHERWISE WHETHER SPECIFICALLY CALLED OUT OR NOT.
7. REPRODUCTION OF STRUCTURAL CONTRACT DOCUMENTS FOR RESUBMITTAL AS SHOP DRAWINGS IS PROHIBITED. SHOP DRAWINGS PRODUCED IN SUCH A MANNER WILL BE REJECTED AND RETURNED.

II. DESIGN LOADS:

1. RISK CATEGORY ---------- III
2. TANK ROOF LOAD:
   A. GROUND SNOW LOAD ---------- 30 PSF
      1. IMPORTANCE FACTOR ---------- 1.1
   B. LIVE LOAD ---------- 100 PSF
3. METER VAULT ROOF LOAD ---------- AASHT0 HS-20
4. WIND LOAD:
   A. ULTIMATE WIND SPEED ---------- 120 MPH
   B. EXPOSURE CATEGORY ---------- C
5. SEISMIC LOADS:
   A. IMPORTANCE FACTOR ---------- 1.25
   B. MAPPED MCE SPECTRAL RESPONSE ACCELLERATION
      0.2 SECOND ---------- 0.195
      1.0 SECOND ---------- 0.060
   C. SITE CLASS ---------- C
   D. SEISMIC DESIGN CATEGORY ---------- B

III. FOUNDATIONS:

1. FOUNDATIONS HAVE BEEN DESIGNED IN ACCORDANCE WITH THE RECOMMENDATIONS SET FORTH IN THE GEOTECHNICAL REPORT PREPARED BY HATCH MOTT MACDONALD, DATED NOVEMBER 7, 2014, PROJECT NUMBER 336016.
2. DESIGN CRITERIA:
   A. ALLOWABLE BEARING PRESSURE ---------- 3,000 PSF
   B. ACTIVE EQUIVALENT LATERAL FLUID PRESSURE OF BACKFILL (DRAINED) ---------- 40 PCF
   C. ACTIVE EQUIVALENT LATERAL FLUID PRESSURE OF BACKFILL (SATURATED) ---------- 70 PCF
   D. AT REST EQUIVALENT LATERAL FLUID PRESSURE OF BACKFILL (DRAINED) ---------- 55 PCF
   E. AT REST EQUIVALENT LATERAL FLUID PRESSURE OF BACKFILL (SATURATED) ---------- 80 PCF
   F. PASSIVE EQUIVALENT LATERAL FLUID PRESSURE OF BACKFILL ---------- 270 PCF
   G. COEFFICIENT OF FRICTION ---------- 0.25
   H. MEASURED GROUND WATER ELEVATION ---------- 5619
3. A QUALIFIED GEOTECHNICAL ENGINEER SHALL PROVIDE FIELD VERIFICATION THAT THE SOIL CONDITIONS ENCOUNTERED PROVIDE VALUES EQUAL OR SUPERIOR TO THE DESIGN CRITERIA OUTLINED ABOVE AND THE REQUIREMENTS OF THE SPECIFICATIONS. FIELD VERIFICATION SHALL OCCUR PRIOR TO PLACING FOUNDATIONS.
4. BACKFILL EQUALLY ON EACH SIDE OF WALLS OR PROVIDE BRACING.
5. LEAK TEST FILTRATE TANK PRIOR TO BACKFILLING. ROOF SLAB MUST BE IN PLACE AND AT 80% OF SPECIFIED STRENGTH PRIOR TO LEAK TESTING OR BACKFILLING.
6. ALL EXCAVATIONS SHALL BE SLOPED OR SHORED SAFELY FOLLOWING LOCAL AND FEDERAL REGULATIONS INCLUDING OSHA EXCAVATION AND TRENCH SAFETY STANDARDS.

IV. CONCRETE AND REINFORCING

1. ALL CONCRETE SHALL BE PREPARED AND PLACED ACCORDING TO ACI 301, "STANDARD SPECIFICATIONS FOR STRUCTURAL CONCRETE", AND ACI 350 "ENVIRONMENTAL STRUCTURES: CODE REQUIREMENTS".
2. ALL CONCRETE SHALL BE NORMAL WEIGHT (145 PCF, STONE AGGREGATE) WITH THE FOLLOWING REQUIREMENTS:
   A. PORTLAND CEMENT ---------- TYPE II
   B. 28 DAY STRENGTH ---------- f'c = 4,000 PSI
   C. MAXIMUM W/C RATIO ---------- 0.45
   D. REINFORCING STEEL, (ASTM A615, GRADE 60) ---------- Fy = 60,000 PSI
3. CHAMFER ALL EXPOSED CORNERS 3/4 INCH.
4. PROVIDE COVER FOR REINFORCING IN ACCORDANCE WITH STANDARD DETAIL (3003) UNLESS NOTED OTHERWISE.
5. PROVIDE MINIMUM SPLICE LENGTHS IN ACCORDANCE WITH STANDARD DETAIL (3009) UNLESS NOTED OTHERWISE.
6. BARS SHALL BE SPLICED BETWEEN SUPPORTS FOR TOP BARS AND OVER SUPPORTS FOR BOTTOM BARS UNLESS INDICATED OTHERWISE.
7. MAKE HORIZONTAL BARS CONTINUOUS AROUND CORNERS OR PROVIDE CORNER BARS. IN ACCORDANCE WITH STANDARD DETAIL (3203).
8. ALL DETAILING, FABRICATION AND ERECTION OF REINFORCING BARS SHALL COMPLY WITH THE ACI MANUAL SP-66 OF STANDARD PRACTICE.
9. NO WELDING OF REINFORCING SHALL BE PERMITTED UNLESS SPECIFICALLY APPROVED IN WRITING BY THE STRUCTURAL ENGINEER.

V. STRUCTURAL STEEL AND ALUMINUM:

1. GENERAL:
   A. ALL STEEL SHALL BE FABRICATED AND ERECTED IN ACCORDANCE WITH AISC STEEL CONSTRUCTION MANUAL- ASD, 13TH EDITION.
   B. ALL ALUMINUM SHALL BE FABRICATED AND ERECTED IN ACCORDANCE WITH THE ALUMINUM ASSOCIATION DESIGN MANUAL.
   C. ALL STRUCTURAL STEEL TO BE HOT - DIP GALVANIZED UNLESS NOTED OTHERWISE. REPAIR GALVANIZING AT FIELD WELDS AND OTHER DAMAGED AREAS USING ZINC BASED ALLOYS (THE "HOT STICK" METHOD) PER ASTM A780 ANNEX A1.
2. DESIGN STRESSES AND ALLOYS:
   A. ANGLES, CHANNELS, PLATES, BARS (ASTM A36) ---------- Fy = 36,000 PSI
   B. PIPE (A53, GRADE B) ---------- Fy = 35,000 PSI
   C. ALUMINUM SHAPES AND PLATES ---------- 6061-T6
3. BOLTS:
   A. ANCHOR RODS ---------- ASTM F1554, GRADE 36
   B. STRUCTURAL BOLTS IN STEEL ---------- ASTM A325
   C. BOLTS IN ALUMINUM OR STAINLESS STEEL ---------- TYPE 304 STAINLESS STEEL
4. WELDING ELECTRODES:
   A. ELECTRODES FOR CARBON STEEL ---------- E70XX
   B. FILLER METAL FOR ALUMINUM ---------- 5356
5. MINIMUM WELDS ACCORDING TO AISC SPECIFICATIONS AND NOT LESS THAN 3/16" FILLET CONTINUOUS, UNLESS DETAILED OTHERWISE. ALL WELDS SHALL BE MADE IN ACCORDANCE WITH CURRENT STANDARDS OF THE AMERICAN WELDING SOCIETY AND PERFORMED BY WELDERS QUALIFIED BY AWS STANDARDS.

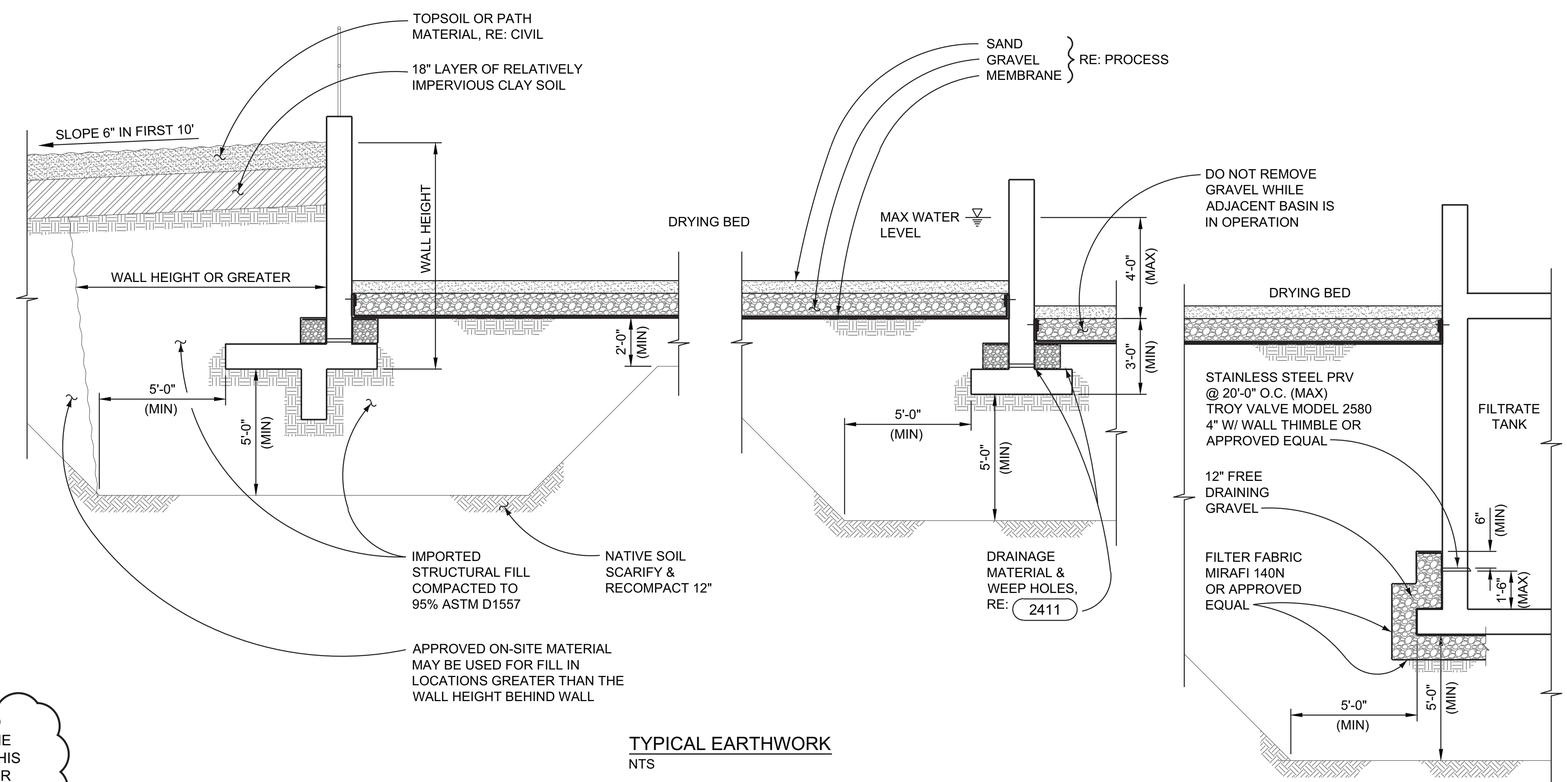

TYPICAL EARTHWORK
NTS

"THESE RECORD DRAWINGS HAVE BEEN PREPARED BASED ON INFORMATION PROVIDED BY OTHERS. THE ENGINEER HAS NOT VERIFIED THE ACCURACY OF THIS INFORMATION AND SHALL NOT BE RESPONSIBLE FOR ANY ERRORS OR OMISSIONS WHICH MAY BE INCORPORATED HEREIN AS A RESULT."

VERIFY SCALES
BAR IS ONE INCH ON ORIGINAL DRAWING.
0" 1"
IF NOT ONE INCH ON THIS DRAWING, ADJUST SCALES ACCORDINGLY.

NO.	DATE	REVISION	BY	CHK.
1	12 / 2015	RECORD DRAWINGS		

DESIGNED BY: JMR
DRAWN BY: JFA
CHECKED BY: RJA
DATE: FEBRUARY 2015

Hatch Mott MacDonald

CITY OF LOUISVILLE, COLORADO
HOWARD BERRY
WATER TREATMENT PLANT
SOLIDS HANDLING IMPROVEMENTS

STRUCTURAL
GENERAL NOTES

PROJECT NO. 336016
SHEET NO. S1
DWG. 10 OF 42

12/15/15 15:24 ARC56862 R19 P:\336016 - LOUISVILLE SOUTH WTP SOLIDS HANDLING\RECORD DRAWINGS\S-STRUCTURAL\S1.DWG XREFS: P:\336016 - LOUISVILLE SOUTH WTP SOLIDS HANDLING\RECORD DRAWINGS\1-XREF\X-TITLE.DWG

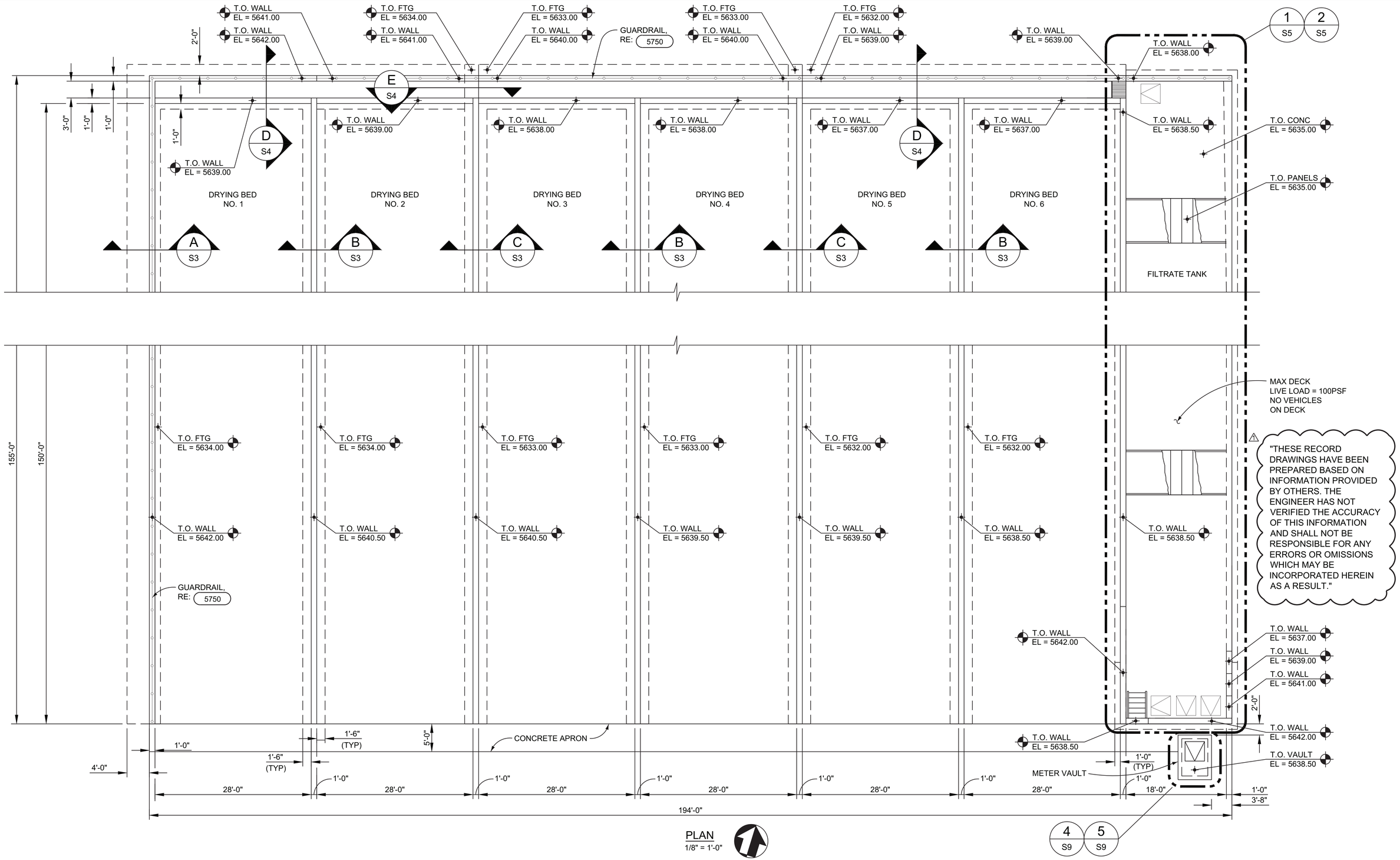

"THESE RECORD DRAWINGS HAVE BEEN PREPARED BASED ON INFORMATION PROVIDED BY OTHERS. THE ENGINEER HAS NOT VERIFIED THE ACCURACY OF THIS INFORMATION AND SHALL NOT BE RESPONSIBLE FOR ANY ERRORS OR OMISSIONS WHICH MAY BE INCORPORATED HEREIN AS A RESULT."

PLAN
1/8" = 1'-0"

VERIFY SCALES	NO.	DATE	REVISION	BY	CHK.
BAR IS ONE INCH ON ORIGINAL DRAWING. 0" 1" IF NOT ONE INCH ON THIS DRAWING, ADJUST SCALES ACCORDINGLY.	1	12 / 2015	RECORD DRAWINGS		

DESIGNED BY: JMR
DRAWN BY: JFA
CHECKED BY: RJA
DATE: FEBRUARY 2015

Hatch Mott MacDonald

CITY OF LOUISVILLE, COLORADO
HOWARD BERRY
WATER TREATMENT PLANT
SOLIDS HANDLING IMPROVEMENTS

DRYING BEDS PLAN

PROJECT NO. 336016
SHEET NO. S2
DWG. 11 OF 42

12/15/15 15:24 ARC58862 R19 P:\336016 - LOUISVILLE SOUTH WTP SOLIDS HANDLING\RECORD DRAWINGS\S-STRUCTURAL\S2, S5.DWG XREFS: P:\336016 - LOUISVILLE SOUTH WTP SOLIDS HANDLING\RECORD DRAWINGS\S-XREFS\X-TITLE.DWG;

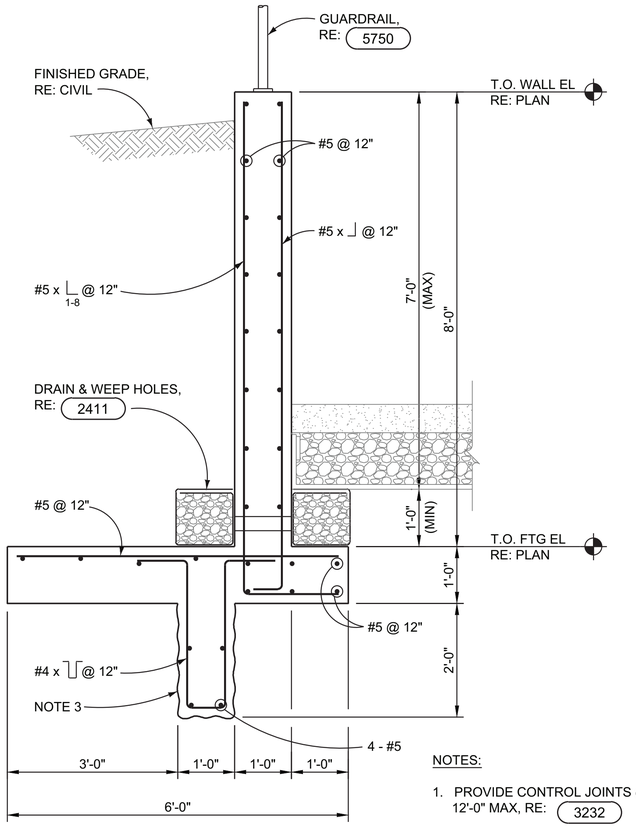

NOTES:

1. PROVIDE CONTROL JOINTS @ 12'-0" MAX, RE: 3232
2. PROVIDE EXPANSION JOINTS @ 60'-0" MAX, RE: 3233
3. CAST KEY DIRECTLY AGAINST SOIL.

WEST WALL (A / S3)
SCALE: 3/4" = 1'-0"

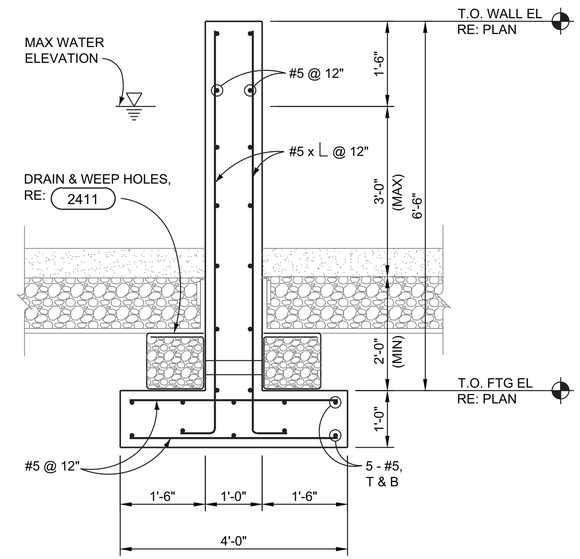

NOTES:

1. PROVIDE CONTROL JOINTS @ 12'-0" MAX, RE: 3232
2. PROVIDE EXPANSION JOINTS @ 60'-0" MAX, RE: 3233

DRYING BED WALL @ LEVEL BASINS (B / S3)
SCALE: 3/4" = 1'-0"

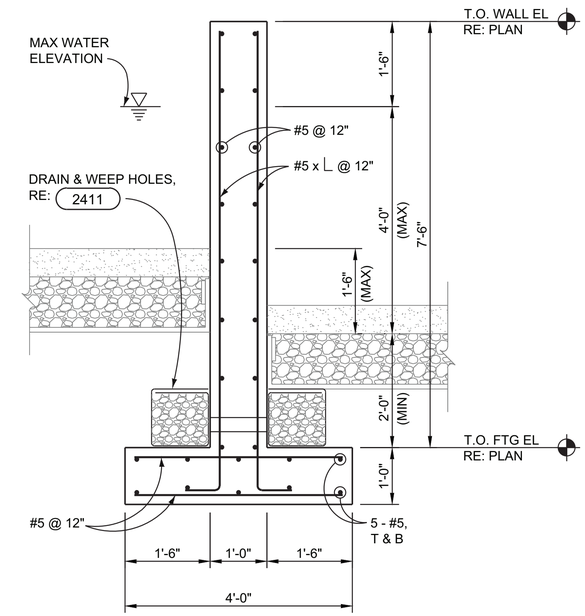

NOTES:

1. PROVIDE CONTROL JOINTS @ 12'-0" MAX, RE: 3232
2. PROVIDE EXPANSION JOINTS @ 60'-0" MAX, RE: 3233

DRYING BED WALL @ STEPPED BASINS (C / S3)
SCALE: 3/4" = 1'-0"

"THESE RECORD DRAWINGS HAVE BEEN PREPARED BASED ON INFORMATION PROVIDED BY OTHERS. THE ENGINEER HAS NOT VERIFIED THE ACCURACY OF THIS INFORMATION AND SHALL NOT BE RESPONSIBLE FOR ANY ERRORS OR OMISSIONS WHICH MAY BE INCORPORATED HEREIN AS A RESULT."

VERIFY SCALES
BAR IS ONE INCH ON ORIGINAL DRAWING.
0" 1"
IF NOT ONE INCH ON THIS DRAWING, ADJUST SCALES ACCORDINGLY.

NO.	DATE	REVISION	BY	CHK.
1	12 / 2015	RECORD DRAWINGS		

DESIGNED BY: RJA
DRAWN BY: JFA
CHECKED BY: RJA
DATE: FEBRUARY 2015

Hatch Mott MacDonald

CITY OF LOUISVILLE, COLORADO
HOWARD BERRY
WATER TREATMENT PLANT
SOLIDS HANDLING IMPROVEMENTS

DRYING BEDS
SECTIONS AND DETAILS

PROJECT NO. 336016
SHEET NO. S3
DWG. 12 OF 42

12/15/15 15:23 ARC56862 R19 P:\336016 - LOUISVILLE SOUTH WTP SOLIDS HANDLING\RECORD DRAWINGS\S-STRUCTURAL\S3,S4,S6,S7,S8,S9.DWG XREFS: P:\336016 - LOUISVILLE SOUTH WTP SOLIDS HANDLING\RECORD DRAWINGS\1-XREFS\X-TITLE.DWG;

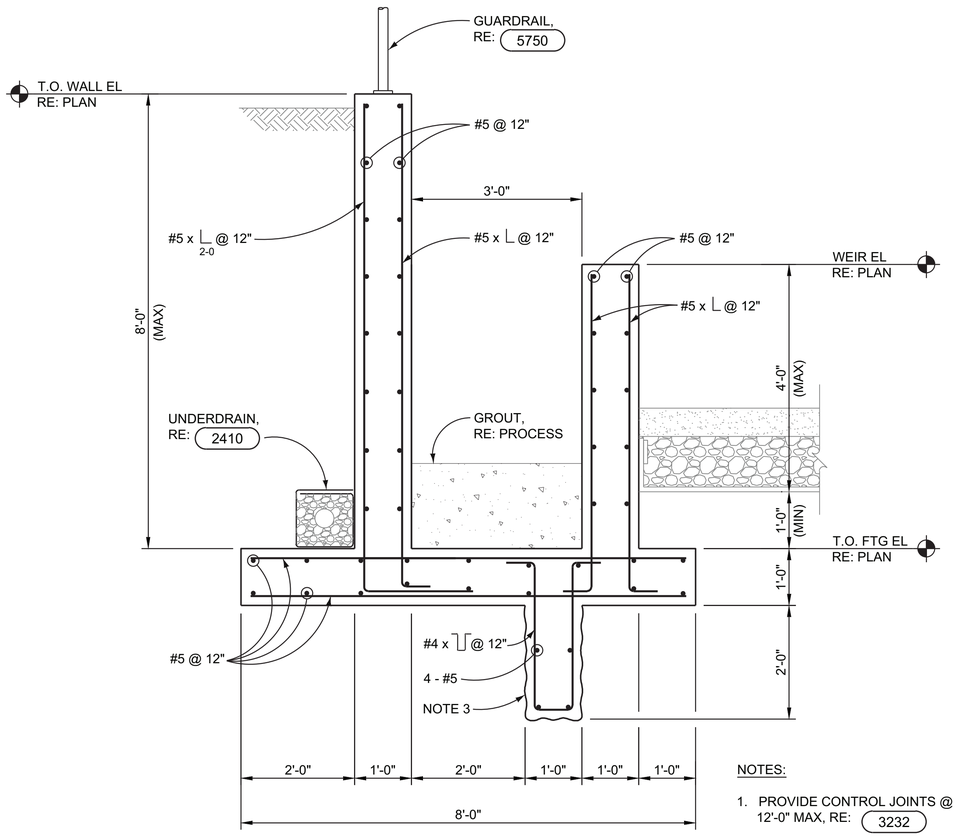

NOTES:

1. PROVIDE CONTROL JOINTS @ 12'-0" MAX, RE: 3232
2. PROVIDE EXPANSION JOINTS @ 60'-0" MAX, RE: 3233
3. CAST KEY DIRECTLY AGAINST SOIL.

NORTH WALL — D / S4
SCALE: 3/4" = 1'-0"

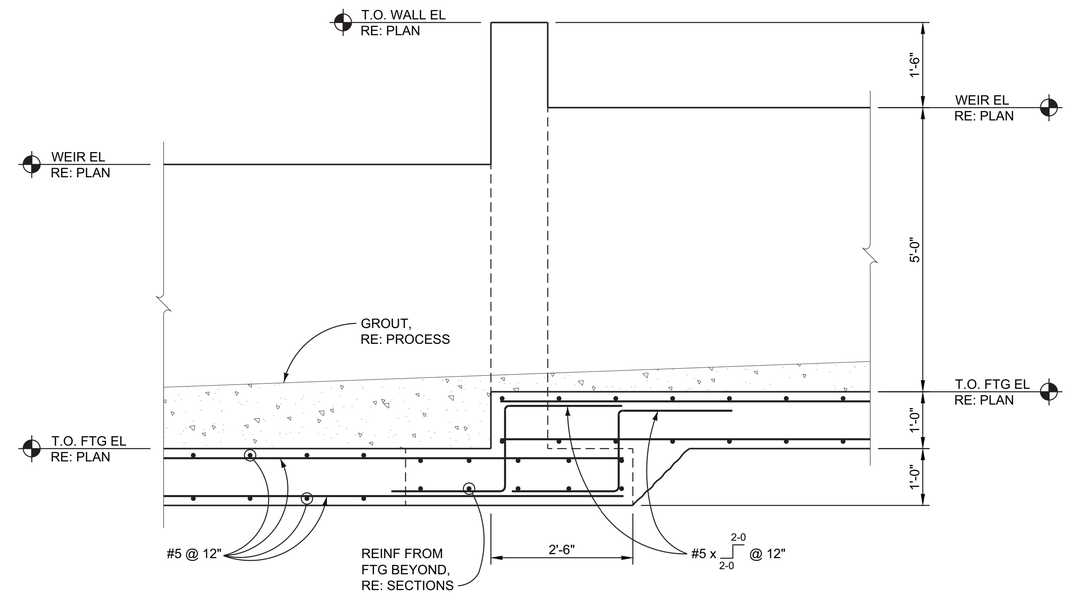

NORTH WALL FTG STEP — E / S4
SCALE: 3/4" = 1'-0"

"THESE RECORD DRAWINGS HAVE BEEN PREPARED BASED ON INFORMATION PROVIDED BY OTHERS. THE ENGINEER HAS NOT VERIFIED THE ACCURACY OF THIS INFORMATION AND SHALL NOT BE RESPONSIBLE FOR ANY ERRORS OR OMISSIONS WHICH MAY BE INCORPORATED HEREIN AS A RESULT."

VERIFY SCALES
BAR IS ONE INCH ON ORIGINAL DRAWING.
0" 1"
IF NOT ONE INCH ON THIS DRAWING, ADJUST SCALES ACCORDINGLY.

NO.	DATE	REVISION	BY	CHK.
1	12 / 2015	RECORD DRAWINGS		

DESIGNED BY: RJA
DRAWN BY: JFA
CHECKED BY: RJA
DATE: FEBRUARY 2015

Hatch Mott MacDonald

CITY OF LOUISVILLE, COLORADO
HOWARD BERRY
WATER TREATMENT PLANT
SOLIDS HANDLING IMPROVEMENTS

DRYING BEDS
SECTIONS AND DETAILS

PROJECT NO. 336016
SHEET NO. S4
DWG. 13 OF 42

12/15/15 15:23 ARCS6862 R19 P:\336016 - LOUISVILLE SOUTH WTP SOLIDS HANDLING\RECORD DRAWINGS\S-STRUCTURAL\S3,S4,S6,S7,S8,S9.DWG XREFS: P:\336016 - LOUISVILLE SOUTH WTP SOLIDS HANDLING\RECORD DRAWINGS\1-XREFS\X-TITLE.DWG;

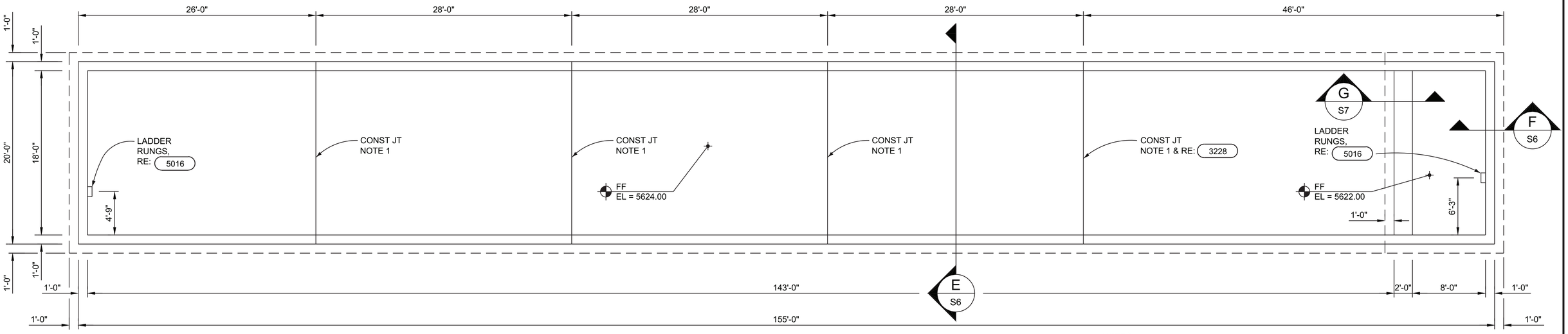

FILTRATE TANK FOUNDATION PLAN (1 / S5)

3/16" = 1'-0"

NOTES:

1. PROVIDE CONSTRUCTION JOINT IN SLAB AND WALLS WHERE SHOWN. ALLOW 7 DAY CURE BEFORE PLACING ADJACENT SLAB OR WALL. EXTEND WATERSTOPS IN WALLS TO EL = 5633.50.

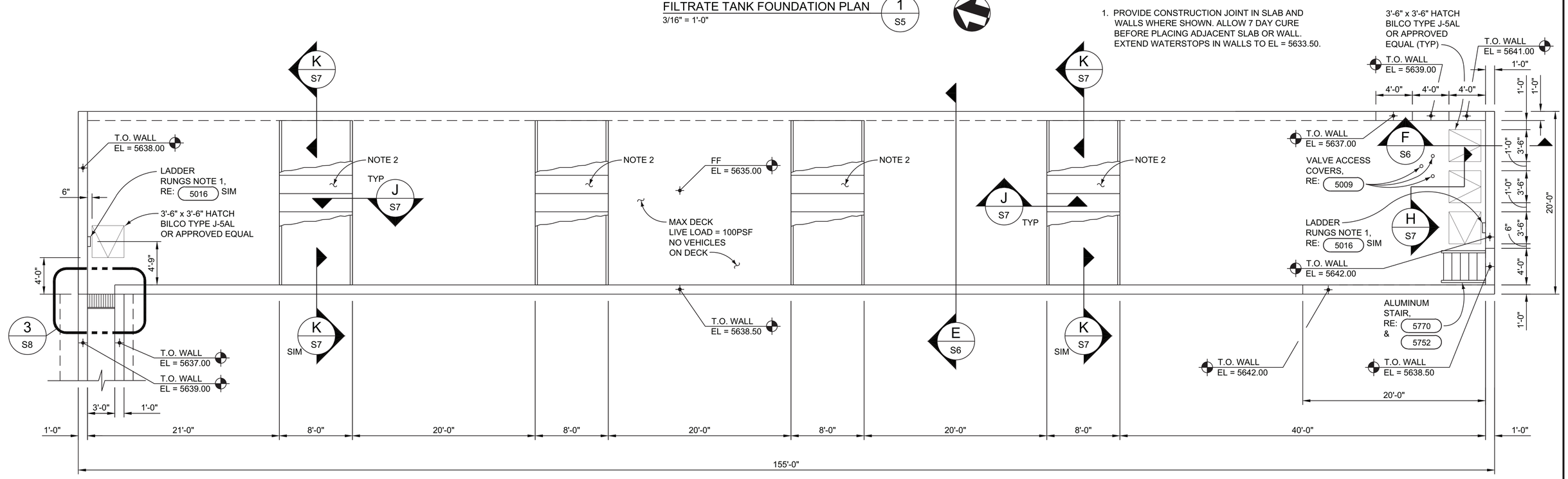

FILTRATE TANK ROOF PLAN (2 / S5)

3/16" = 1'-0"

"THESE RECORD DRAWINGS HAVE BEEN PREPARED BASED ON INFORMATION PROVIDED BY OTHERS. THE ENGINEER HAS NOT VERIFIED THE ACCURACY OF THIS INFORMATION AND SHALL NOT BE RESPONSIBLE FOR ANY ERRORS OR OMISSIONS WHICH MAY BE INCORPORATED HEREIN AS A RESULT."

NOTES:

1. CONTINUE LADDER RUNGS TO 2'-6"± ABOVE SLAB FOR HAND HOLDS. EXTEND THESE RUNGS ONLY 4" FROM FACE OF CONCRETE TO CLEAR HATCH DOOR.
2. PROVIDE 8' LONG x 2' WIDE STRONGWELL COMPOSOLITE PANELS OR APPROVED EQUAL TO COVER OPENING. PROVIDE HANDLE EACH END OF EACH PANEL, RE: 6604

VERIFY SCALES

BAR IS ONE INCH ON ORIGINAL DRAWING.

0" 1"

IF NOT ONE INCH ON THIS DRAWING, ADJUST SCALES ACCORDINGLY.

NO.	DATE	REVISION	BY	CHK.
1	12 / 2015	RECORD DRAWINGS		

DESIGNED BY: JMR
DRAWN BY: JFA
CHECKED BY: RJA
DATE: FEBRUARY 2015

Hatch Mott MacDonald

CITY OF LOUISVILLE, COLORADO
HOWARD BERRY
WATER TREATMENT PLANT
SOLIDS HANDLING IMPROVEMENTS

FILTRATE TANK PLANS

PROJECT NO. 336016
SHEET NO. S5
DWG. 14 OF 42

12/15/15 15:24 ARC56862 R19 P:\336016 - LOUISVILLE SOUTH WTP SOLIDS HANDLING\RECORD DRAWINGS\S-STRUCTURAL\S2, S5.DWG XREFS: P:\336016 - LOUISVILLE SOUTH WTP SOLIDS HANDLING\RECORD DRAWINGS\1-XREF\X-TITLE.DWG;

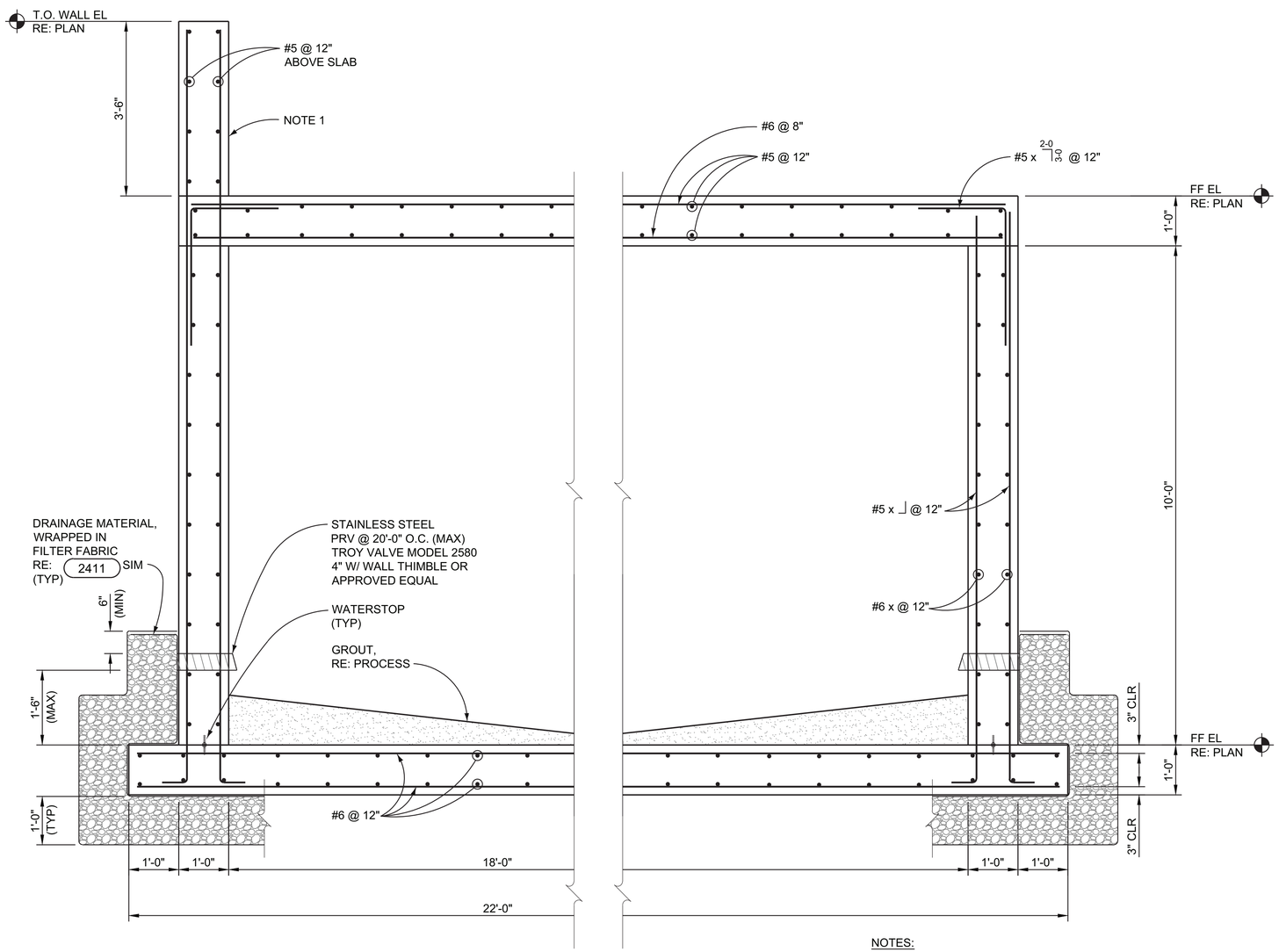

NOTES:

1. PROVIDE CONTROL JOINTS IN UPPER WALL @ 10'-0" O.C. MAX, RE: 3232 SIM

TANK SECTION E/S6
SCALE: 3/4" = 1'-0"

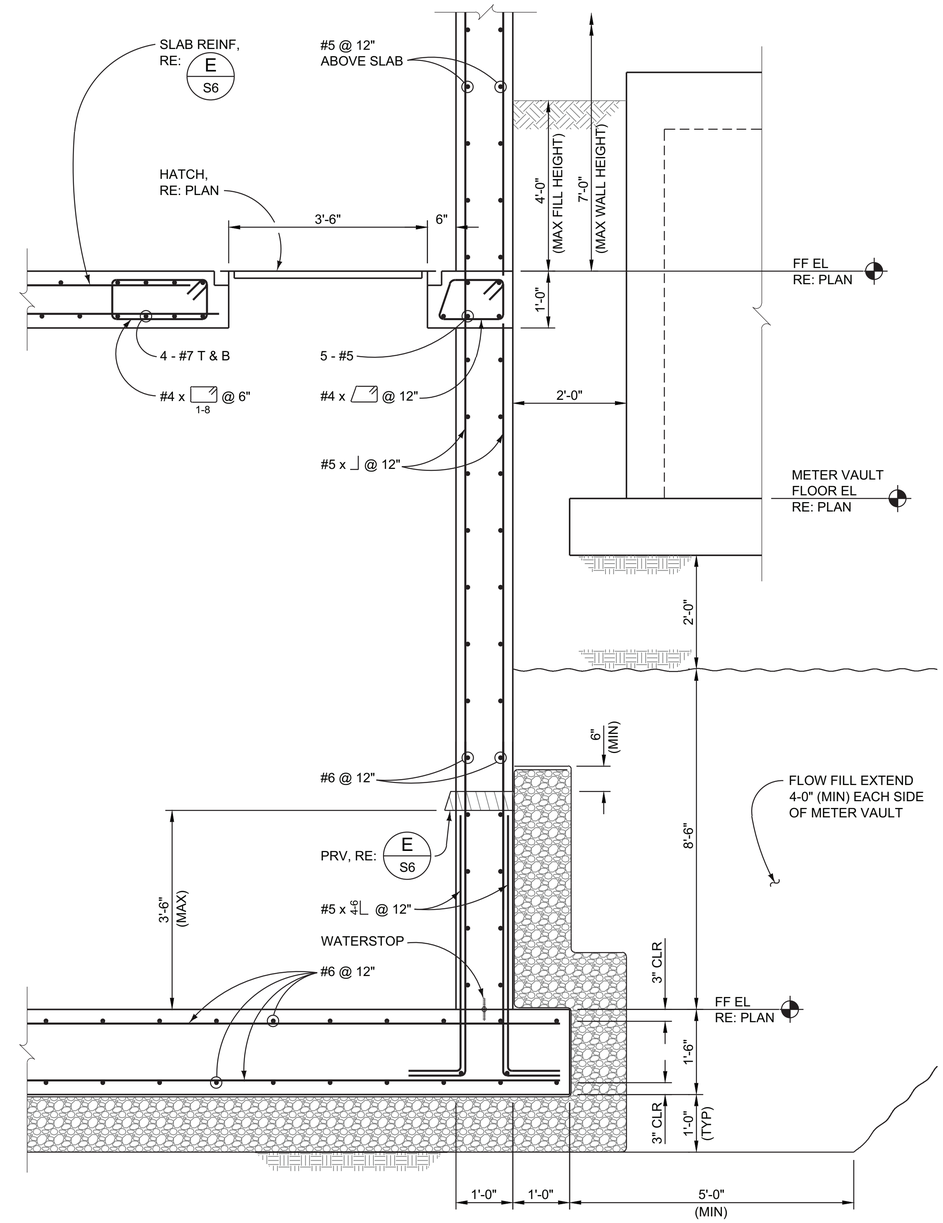

NOTES:

1. ADDITIONAL REINFORCING PER 3211 NOT REQUIRED AT SOUTH END HATCHES.

TANK SOUTH END F/S6
SCALE: 3/4" = 1'-0"

"THESE RECORD DRAWINGS HAVE BEEN PREPARED BASED ON INFORMATION PROVIDED BY OTHERS. THE ENGINEER HAS NOT VERIFIED THE ACCURACY OF THIS INFORMATION AND SHALL NOT BE RESPONSIBLE FOR ANY ERRORS OR OMISSIONS WHICH MAY BE INCORPORATED HEREIN AS A RESULT."

VERIFY SCALES
BAR IS ONE INCH ON ORIGINAL DRAWING.
0" 1"
IF NOT ONE INCH ON THIS DRAWING, ADJUST SCALES ACCORDINGLY.

NO.	DATE	REVISION	BY	CHK.
1	12 / 2015	RECORD DRAWINGS		

DESIGNED BY: JMR
DRAWN BY: JFA
CHECKED BY: RJA
DATE: FEBRUARY 2015

Hatch Mott MacDonald

CITY OF LOUISVILLE, COLORADO
HOWARD BERRY
WATER TREATMENT PLANT
SOLIDS HANDLING IMPROVEMENTS

FILTRATE TANK
SECTIONS

PROJECT NO. 336016
SHEET NO. S6
DWG. 15 OF 42

12/15/15 15:23 ARC56862 R19 P:\336016 - LOUISVILLE SOUTH WTP SOLIDS HANDLING\RECORD DRAWINGS\S-STRUCTURAL\S3,S4,S6,S7,S8,S9.DWG XREFS: P:\336016 - LOUISVILLE SOUTH WTP SOLIDS HANDLING\RECORD DRAWINGS\1-XREFX-TITLE.DWG;

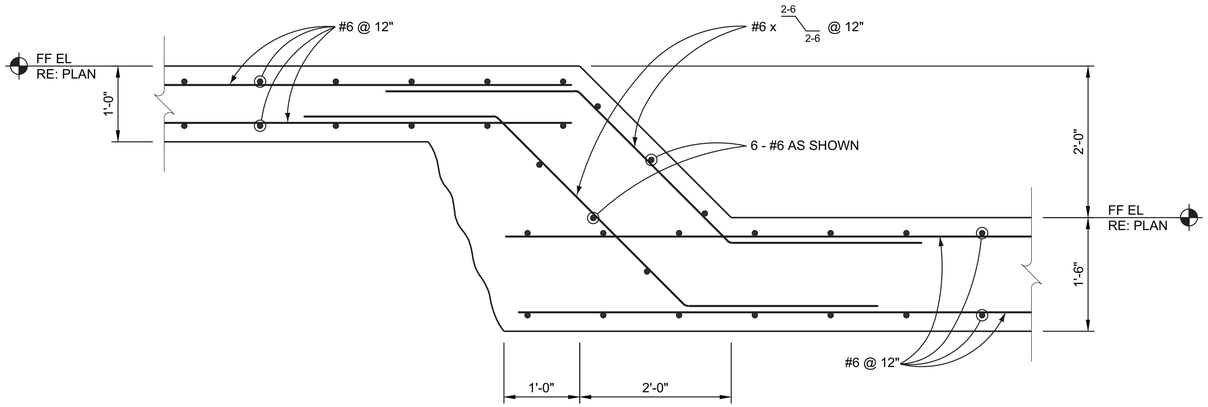

SLAB STEP (G / S7)
SCALE: 1" = 1'-0"

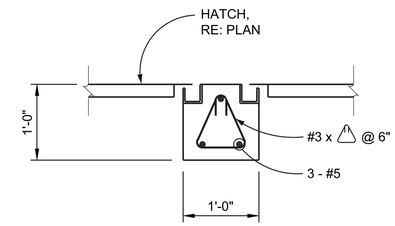

BEAM BETWEEN HATCHES (H / S7)
SCALE: 1" = 1'-0"

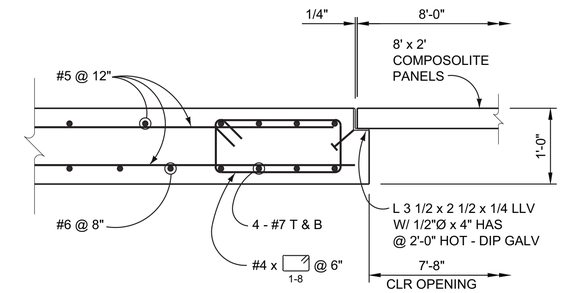

BEAM @ OPENING (J / S7)
SCALE: 1" = 1'-0"

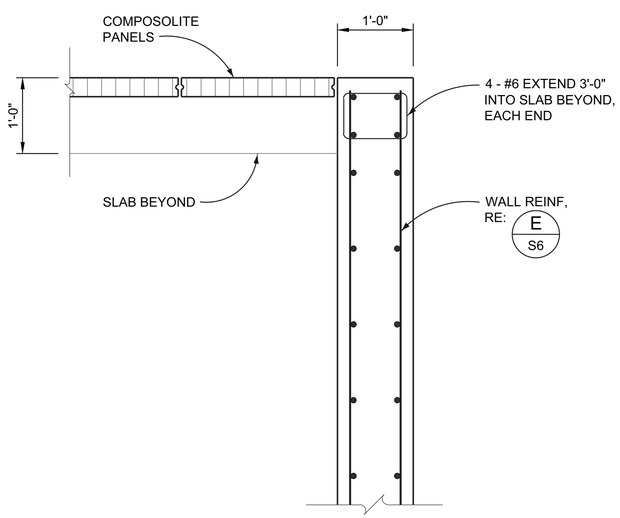

WALL @ OPENING (K / S7)
SCALE: 1" = 1'-0"

"THESE RECORD DRAWINGS HAVE BEEN PREPARED BASED ON INFORMATION PROVIDED BY OTHERS. THE ENGINEER HAS NOT VERIFIED THE ACCURACY OF THIS INFORMATION AND SHALL NOT BE RESPONSIBLE FOR ANY ERRORS OR OMISSIONS WHICH MAY BE INCORPORATED HEREIN AS A RESULT."

VERIFY SCALES
BAR IS ONE INCH ON ORIGINAL DRAWING.
0" 1"
IF NOT ONE INCH ON THIS DRAWING, ADJUST SCALES ACCORDINGLY.

NO.	DATE	REVISION	BY	CHK.
1	12 / 2015	RECORD DRAWINGS		

DESIGNED BY: RJA
DRAWN BY: JFA
CHECKED BY: RJA
DATE: FEBRUARY 2015

Hatch Mott MacDonald

CITY OF LOUISVILLE, COLORADO
HOWARD BERRY
WATER TREATMENT PLANT
SOLIDS HANDLING IMPROVEMENTS

FILTRATE TANK
SECTIONS

PROJECT NO. 336016
SHEET NO. S7
DWG. 16 OF 42

12/15/15 15:23 ARC56862 R19 P:\336016 - LOUISVILLE SOUTH WTP SOLIDS HANDLING\RECORD DRAWINGS\S-STRUCTURAL\S3,S4,S6,S7,S8,S9.DWG XREFS: P:\336016 - LOUISVILLE SOUTH WTP SOLIDS HANDLING\RECORD DRAWINGS\1-XREFX-TITLE.DWG;

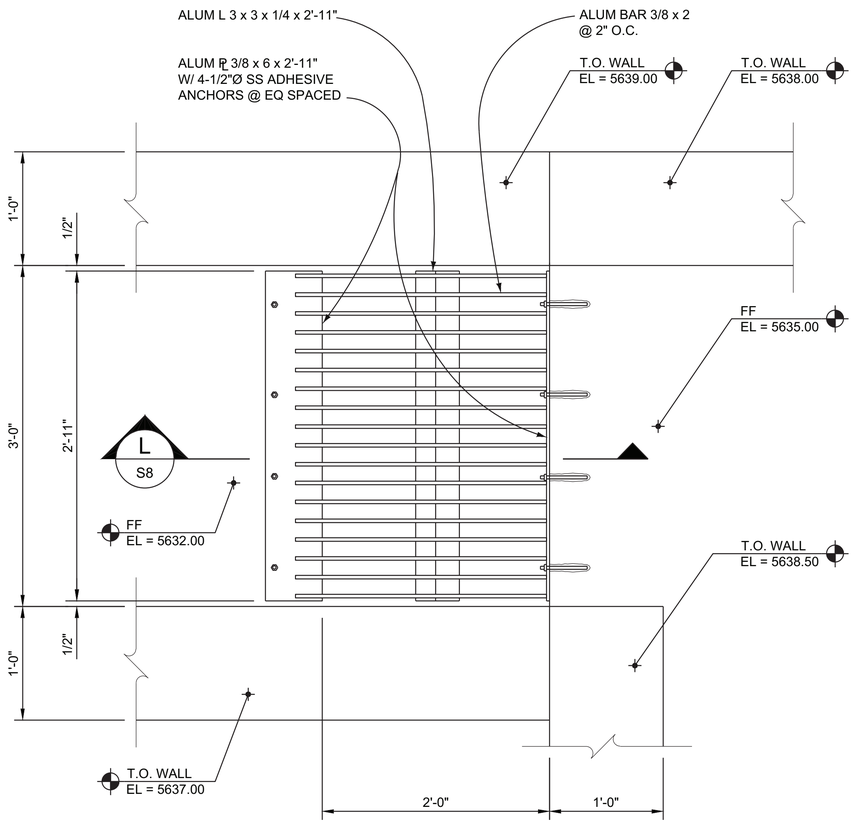

PARTIAL PLAN 3/S8
SCALE: 1 1/2" = 1'-0"

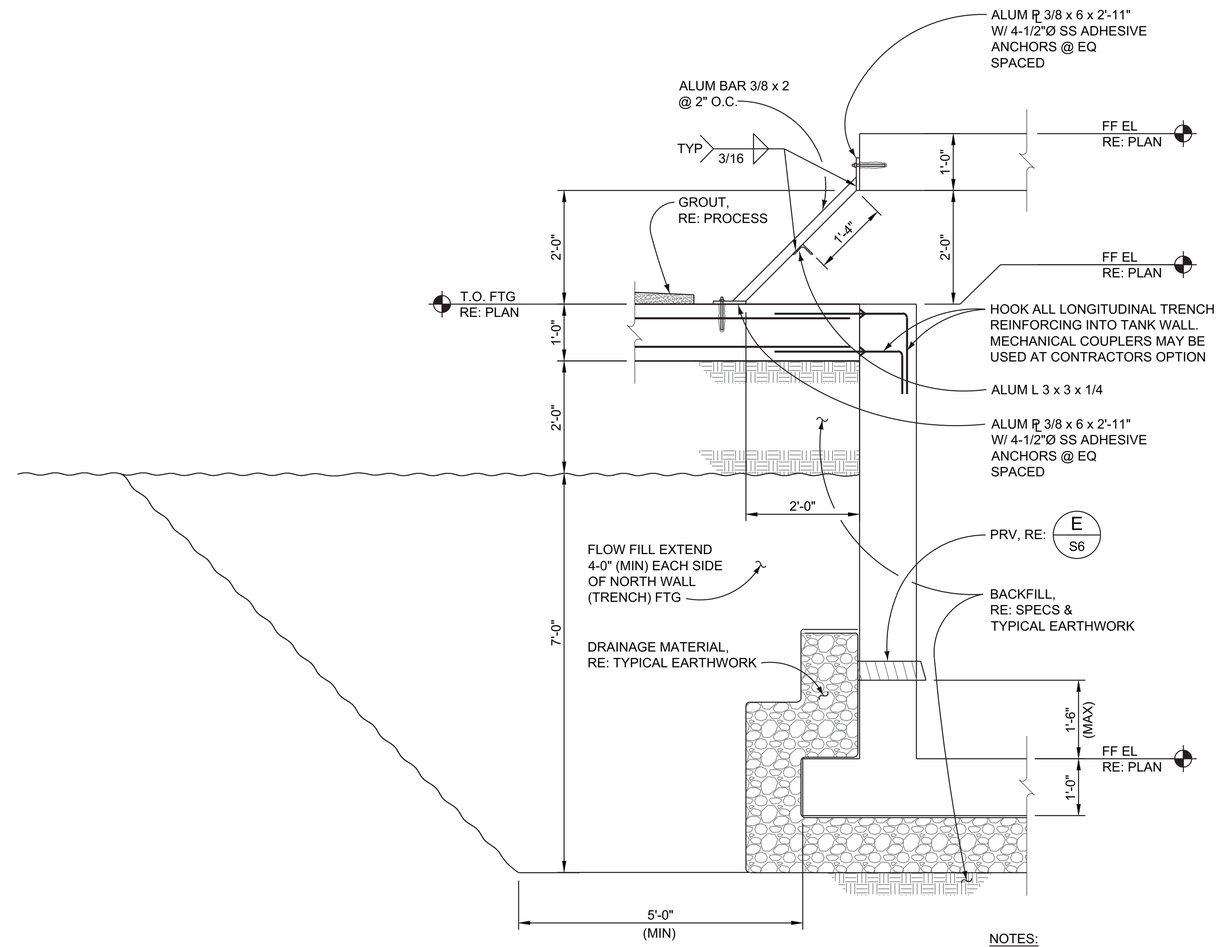

NOTES:

1. MOST REINFORCING NOT SHOWN FOR CLARITY.

SECTION L/S8
SCALE: 3/4" = 1'-0"

"THESE RECORD DRAWINGS HAVE BEEN PREPARED BASED ON INFORMATION PROVIDED BY OTHERS. THE ENGINEER HAS NOT VERIFIED THE ACCURACY OF THIS INFORMATION AND SHALL NOT BE RESPONSIBLE FOR ANY ERRORS OR OMISSIONS WHICH MAY BE INCORPORATED HEREIN AS A RESULT."

VERIFY SCALES
BAR IS ONE INCH ON ORIGINAL DRAWING.
0" 1"
IF NOT ONE INCH ON THIS DRAWING, ADJUST SCALES ACCORDINGLY.

NO.	DATE	REVISION	BY	CHK.
1	12 / 2015	RECORD DRAWINGS		

DESIGNED BY: JMR
DRAWN BY: JFA
CHECKED BY: RJA
DATE: FEBRUARY 2015

Hatch Mott MacDonald

CITY OF LOUISVILLE, COLORADO
HOWARD BERRY
WATER TREATMENT PLANT
SOLIDS HANDLING IMPROVEMENTS

FILTRATE TANK
PLAN AND SECTION

PROJECT NO. 336016
SHEET NO. S8
DWG. 17 OF 42

12/15/15 15:23 ARC56862 R19 P:\336016 - LOUISVILLE SOUTH WTP SOLIDS HANDLING\RECORD DRAWINGS\S-STRUCTURAL\S3,S4,S6,S7,S8,S9.DWG XREFS: P:\336016 - LOUISVILLE SOUTH WTP SOLIDS HANDLING\RECORD DRAWINGS\1-XREFX-TITLE.DWG;

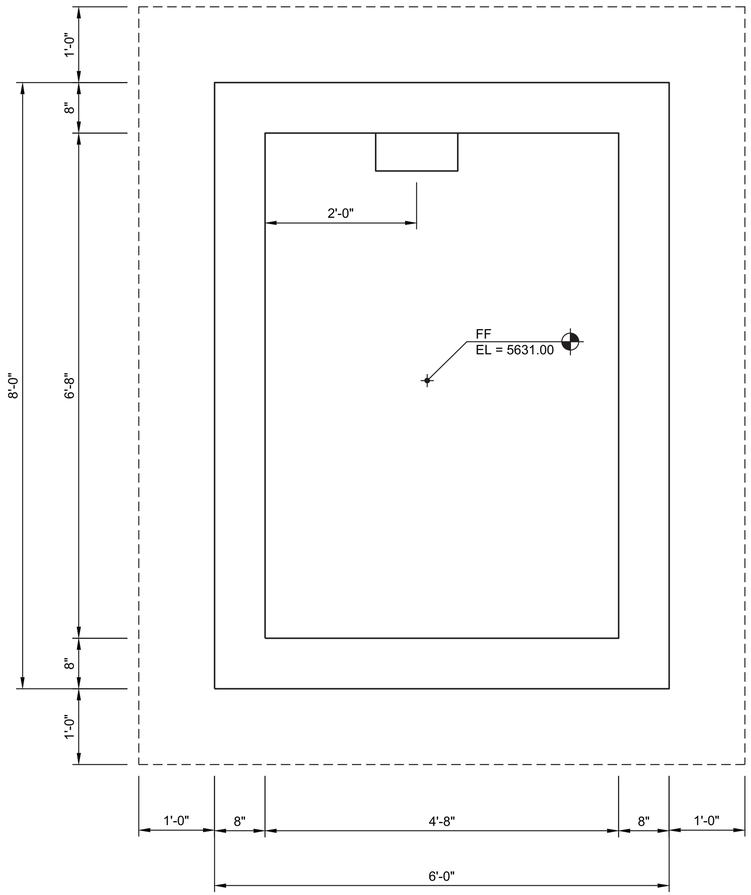

METER VAULT FOUNDATION PLAN 4 S9
SCALE: 1" = 1'-0"

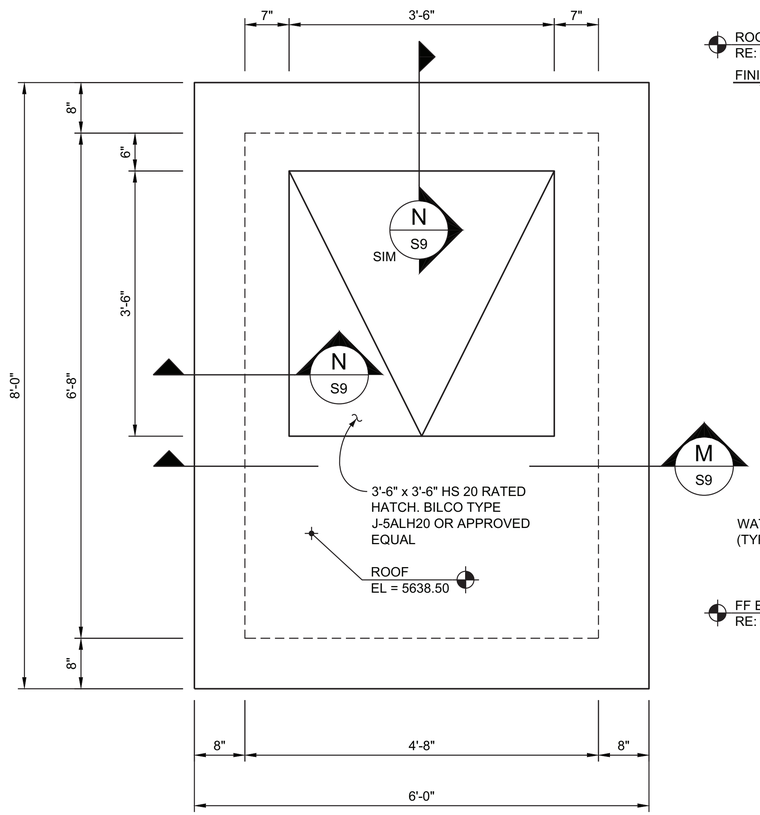

METER VAULT ROOF PLAN 5 S9
SCALE: 1" = 1'-0"

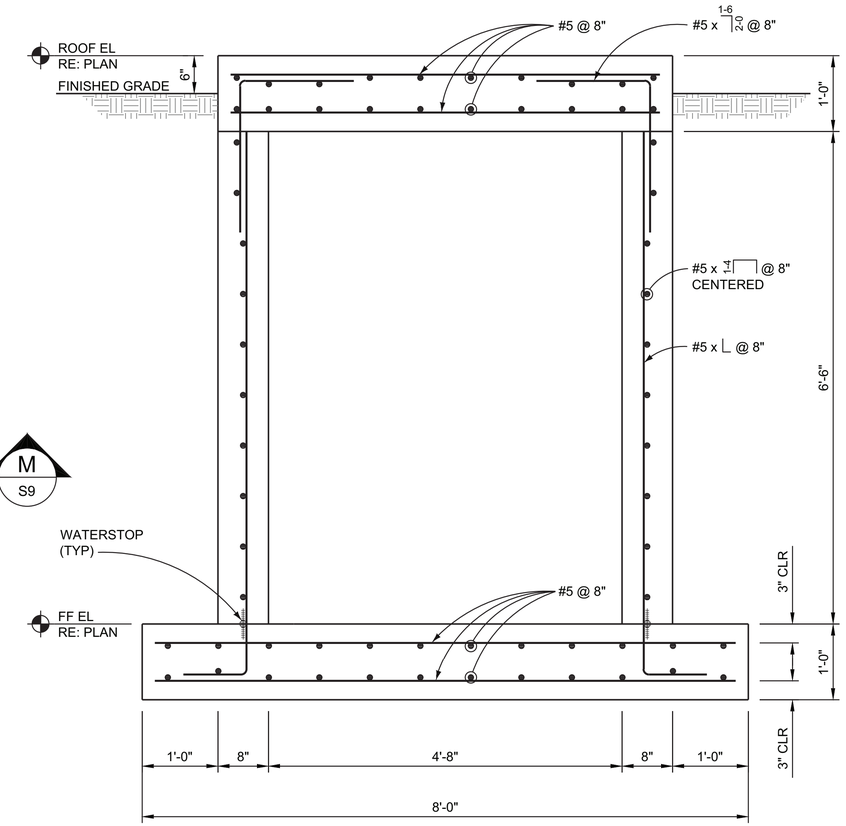

VAULT SECTION M S9
SCALE: 1" = 1'-0"

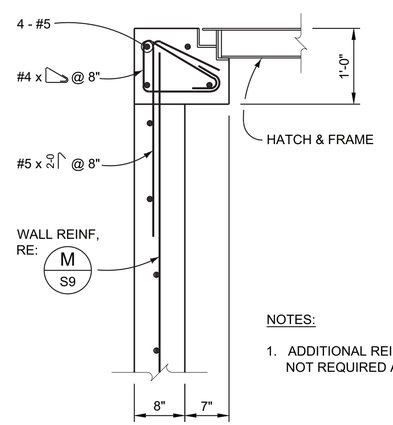

SECTION @ HATCH N S9
SCALE: 1" = 1'-0"

NOTES:

1. ADDITIONAL REINFORCING PER 3211 NOT REQUIRED AT THIS HATCH.

"THESE RECORD DRAWINGS HAVE BEEN PREPARED BASED ON INFORMATION PROVIDED BY OTHERS. THE ENGINEER HAS NOT VERIFIED THE ACCURACY OF THIS INFORMATION AND SHALL NOT BE RESPONSIBLE FOR ANY ERRORS OR OMISSIONS WHICH MAY BE INCORPORATED HEREIN AS A RESULT."

VERIFY SCALES
BAR IS ONE INCH ON ORIGINAL DRAWING.
0" 1"
IF NOT ONE INCH ON THIS DRAWING, ADJUST SCALES ACCORDINGLY.

NO.	DATE	REVISION	BY	CHK.
1	12 / 2015	RECORD DRAWINGS		

DESIGNED BY: JMR
DRAWN BY: JFA
CHECKED BY: RJA
DATE: FEBRUARY 2015

Hatch Mott MacDonald

CITY OF LOUISVILLE, COLORADO
HOWARD BERRY
WATER TREATMENT PLANT
SOLIDS HANDLING IMPROVEMENTS

METER VAULT
PLANS AND SECTIONS

PROJECT NO. 336016
SHEET NO. S9
DWG. 18 OF 42

12/15/15 15:23 ARC56862 R19 P:\336016 - LOUISVILLE SOUTH WTP SOLIDS HANDLING\RECORD DRAWINGS\S-STRUCTURAL\S3,S4,S5,S6,S7,S8,S9.DWG XREFS: P:\336016 - LOUISVILLE SOUTH WTP SOLIDS HANDLING\RECORD DRAWINGS\1-XREFX-TITLE.DWG;

EQUIPMENT

- PNEUMATIC DIAPHRAGM PUMP
- CENTRIFUGAL PUMP (DRY PIT)
- CENTRIFUGAL PUMP (WET PIT)
- PISTON PUMP
- DIAPHRAGM PUMP
- PROGRESSIVE CAVITY PUMP
- GEAR PUMP OR BLOWER (POSITIVE DISPLACEMENT)
- COMPRESSOR (PISTON)
- COMPRESSOR (CENTRIFUGAL OR BLOWER)
- EJECTOR-EDUCTOR
- CHEMICAL FEED PUMP
- EMERGENCY SHOWER/EYEWASH
- FLOWMETER - MAGNETIC TYPE
- FLOWMETER - PROPELLER TYPE (DISC, TURBINE)
- CONSTANT FLOW FITTING
- FLOWMETER - ROTAMETER TYPE
- FLOWMETER - FLOW TUBE
- QUICK DISCONNECT
- STATIC MIXER
- CALIBRATION COLUMN

MISC. PIPING SYMBOLS

- PIG INSERTION FITTING
- PIG COLLECTION FITTING
- FV FLOW VENTURI
- UNION
- END CAP (SCREWED / WELDED)
- HOSE RACK
- WYE STRAINER
- SIGHT FLOW INDICATOR
- FLEXIBLE CONNECTOR
- FLOW LINE AND DIRECTION
- PRESSURE GAGE STATION
- BACK FLOW PREVENTER (BFP)

PIPE FITTINGS

3"Ø AND LARGER	SMALLER THAN 3"Ø	
		PIPE
		WELDED JOINT
		GROOVED PIPE COUPLING JOINT
		FLANGED JOINT
		BLIND FLANGE
		MECHANICAL JOINT
		BELL & SPIGOT JOINT (LEADED)
		HUB & SPIGOT JOINT (RUBBER GASKET)
		FLANGED COUPLING ADAPTER (FCA)
		FLANGED COUPLING W/TIE RODS
		FLEXIBLE MECHANICAL COUPLING
		FLEXIBLE MECHANICAL COUPLING WITH THRUST TIE
		RUBBER FLEXIBLE COUPLING
		90° ELBOW (11 1/4 TO 45° SIMILAR)
		90° ELBOW UP (11 1/4 TO 45° SIMILAR)
		90° ELBOW DOWN (11 1/4 TO 45° SIMILAR)
		TEE
		TEE UP
		TEE DOWN
		LATERAL
		LATERAL UP
		LATERAL DOWN
		CONCENTRIC REDUCER
		ECCENTRIC REDUCER
		UNION

GATES

PLAN VIEW	SECTION VIEW	
		FABRICATED SLIDE GATE

VALVES

- OR GATE
- IRRIGATION CONTROL
- K KNIFE GATE
- OR BUTTERFLY
- GLOBE
- BALL
- V VEE-BALL
- OR PLUG OR COCK
- NEEDLE
- DIAPHRAGM
- S SOLENOID
- F FLUSHING CONNECTION
- M O/C MOTORIZED (OPEN/CLOSE ACTUATOR)
- M MOD MOTORIZED (MODULATING ACTUATOR)
- PNEUMATIC ACTUATED
- E ELECTRICALLY ACTUATED
- DUPLEX HOSE VALVE
- S SAMPLE
- MUD
- PRESSURE RELIEF (ANGLE)
- PRESSURE RELIEF (GLOBE)
- PRESSURE REGULATING
- ANGLE
- OR CHECK
- OR BALL CHECK
- BALL CHECK (SPRING LOADED)
- 3-WAY
- A AIR RELEASE
- CA COMBINATION AIR
- NF NON-FREEZE HOSE BIB
- FH FIRE HYDRANT
- Y YARD HYDRANT

NOTE:

1. THIS IS A STANDARD LEGEND SHEET. THEREFORE, SOME SYMBOLS OR ABBREVIATIONS APPEARING ON THIS SHEET MAY NOT BE USED.

"THESE RECORD DRAWINGS HAVE BEEN PREPARED BASED ON INFORMATION PROVIDED BY OTHERS. THE ENGINEER HAS NOT VERIFIED THE ACCURACY OF THIS INFORMATION AND SHALL NOT BE RESPONSIBLE FOR ANY ERRORS OR OMISSIONS WHICH MAY BE INCORPORATED HEREIN AS A RESULT."

VERIFY SCALES
BAR IS ONE INCH ON ORIGINAL DRAWING.
0" 1"
IF NOT ONE INCH ON THIS DRAWING, ADJUST SCALES ACCORDINGLY.

NO.	DATE	REVISION	BY	CHK.
1	12 / 2015	RECORD DRAWINGS		

DESIGNED BY: RJA
DRAWN BY: JFA
CHECKED BY: RJA
DATE: FEBRUARY 2015

Hatch Mott MacDonald

CITY OF LOUISVILLE, COLORADO
HOWARD BERRY
WATER TREATMENT PLANT
SOLIDS HANDLING IMPROVEMENTS

PROCESS LEGEND

PROJECT NO. 336016
SHEET NO. P1
DWG. 19 OF 42

12/15/15 15:22 ARC56862 R19 P:\336016 - LOUISVILLE SOUTH WTP SOLIDS HANDLING\RECORD DRAWINGS\6-PROCESS\P1-LEGEND.DWG XREFS: P:\336016 - LOUISVILLE SOUTH WTP SOLIDS HANDLING\RECORD DRAWINGS\1-XREF\X-TITLE.DWG;

SLW CONNECTION DETAIL
NTS

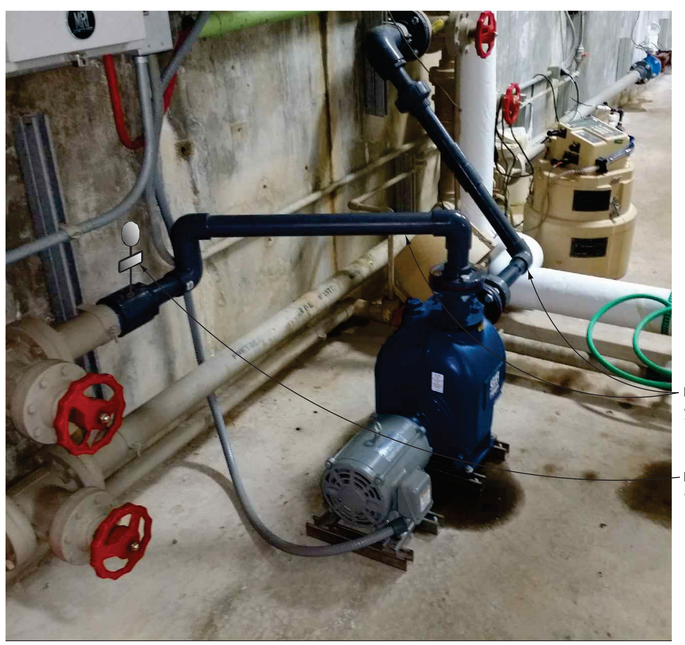

SLW PUMP DETAIL
NTS

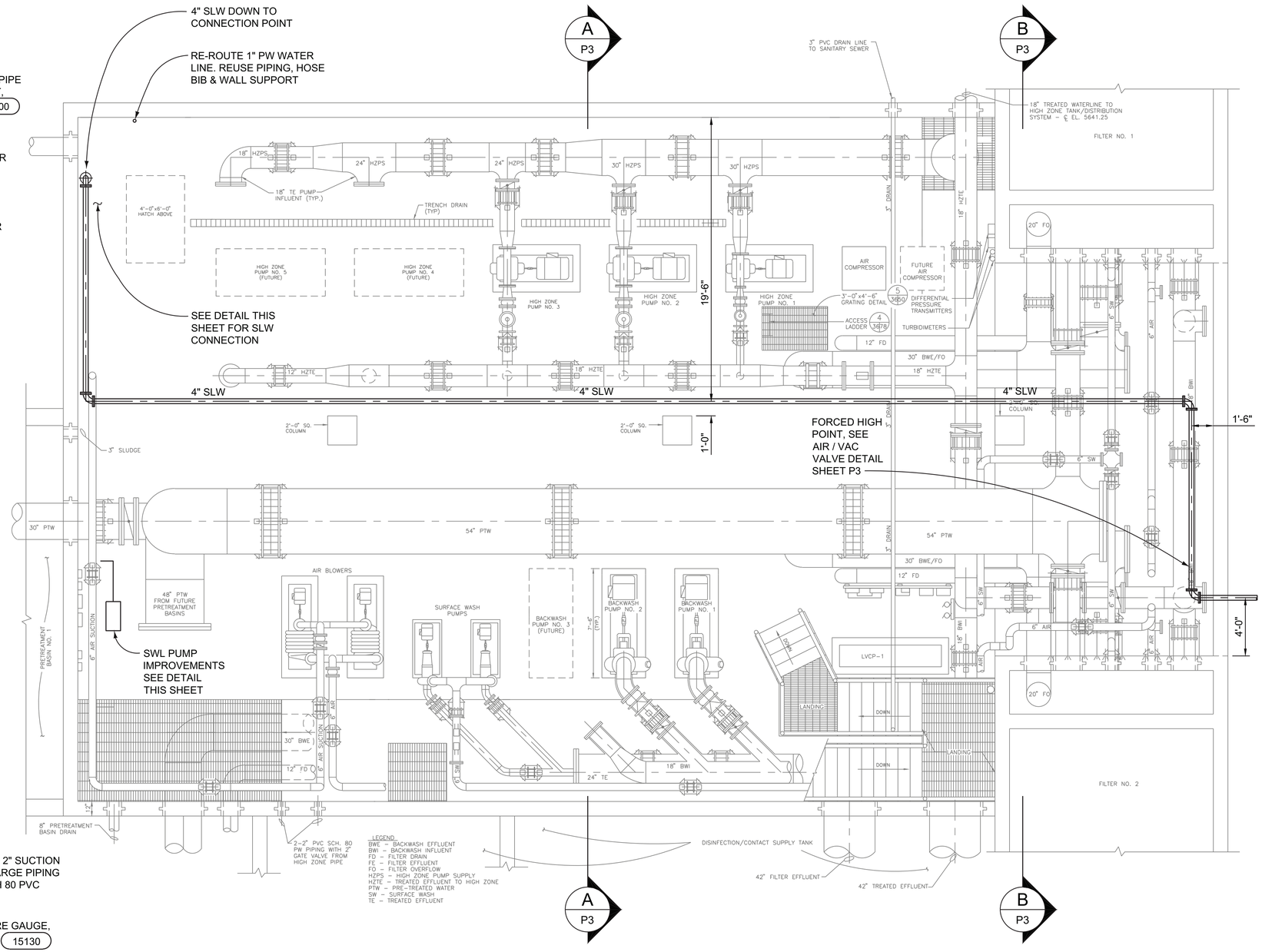

PLAN
1/4"=1'-0"

"THESE RECORD DRAWINGS HAVE BEEN PREPARED BASED ON INFORMATION PROVIDED BY OTHERS. THE ENGINEER HAS NOT VERIFIED THE ACCURACY OF THIS INFORMATION AND SHALL NOT BE RESPONSIBLE FOR ANY ERRORS OR OMISSIONS WHICH MAY BE INCORPORATED HEREIN AS A RESULT."

VERIFY SCALES
BAR IS ONE INCH ON ORIGINAL DRAWING.
0" 1"
IF NOT ONE INCH ON THIS DRAWING, ADJUST SCALES ACCORDINGLY.

NO.	DATE	REVISION	BY	CHK.
1	12 / 2015	RECORD DRAWINGS		

DESIGNED BY: RJA
DRAWN BY: JFA
CHECKED BY: RJA
DATE: FEBRUARY 2015

Hatch Mott MacDonald

CITY OF LOUISVILLE, COLORADO
HOWARD BERRY
WATER TREATMENT PLANT
SOLIDS HANDLING IMPROVEMENTS

EXISTING PROCESS BUILDING
LOWER LEVEL PLAN
NEW SLUDGE WASTE LINE

PROJECT NO. 336016
SHEET NO. P2
DWG. 20 OF 42

12/15/15 15:56 ARCS8862 R19 P:\336016 - LOUISVILLE SOUTH\WTP SOLIDS HANDLING\RECORD DRAWINGS\6-PROCESS\P2, P3 DWG XREFS: P:\336016 - LOUISVILLE SOUTH\WTP SOLIDS HANDLING\1-XREF\X-TITLE.DWG;
IMAGES: P:\336016 - LOUISVILLE SOUTH\WTP SOLIDS HANDLING\1-XREF\SWL PUMP.JPG, P:\336016 - LOUISVILLE SOUTH\WTP SOLIDS HANDLING\1-XREF\20141116_155306.JPG;

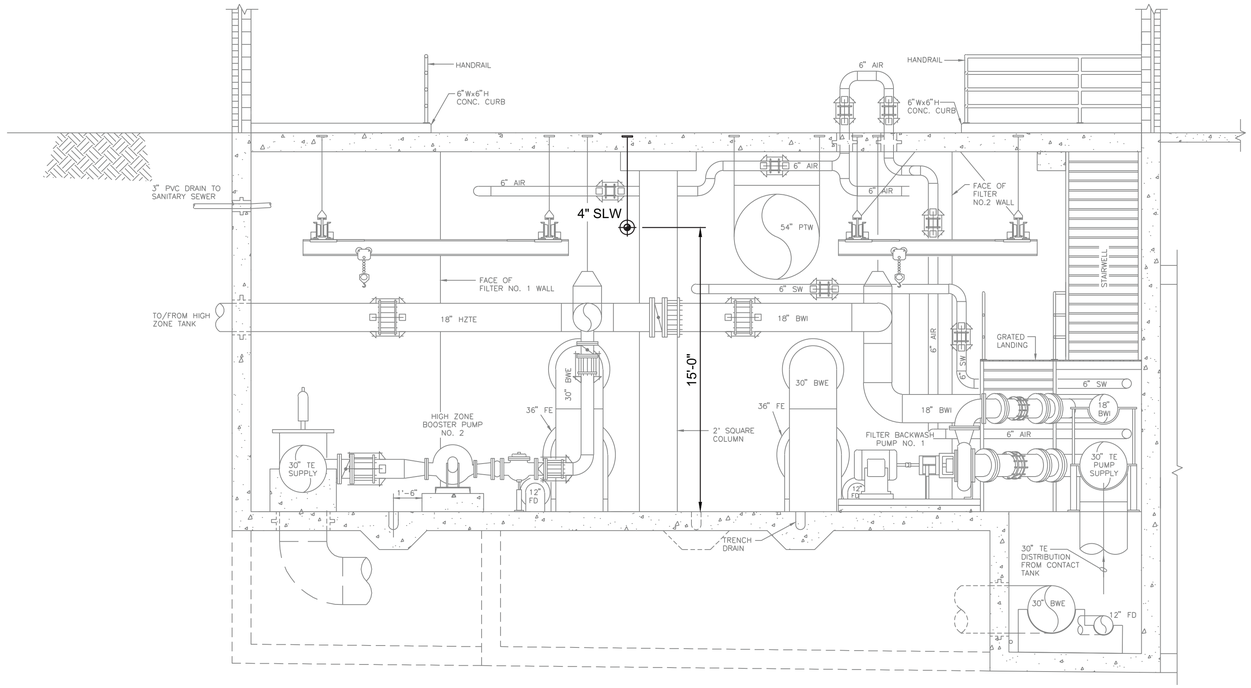

SECTION A
1/4"=1'-0"
P3

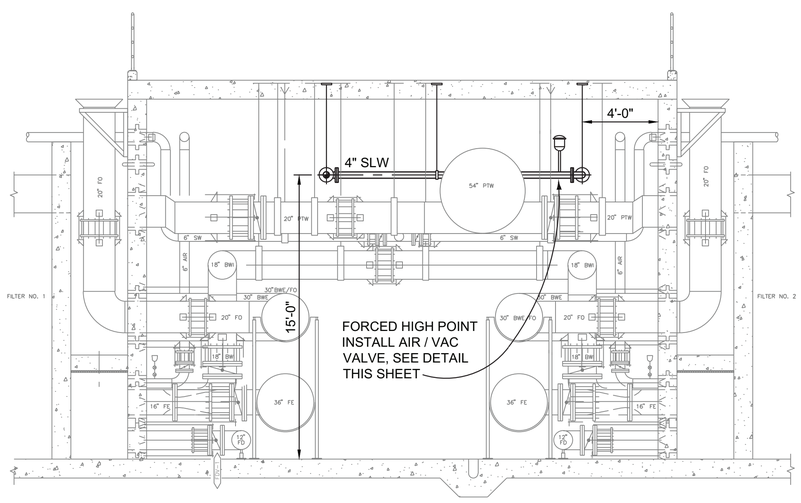

SECTION B
1/4"=1'-0"
P3

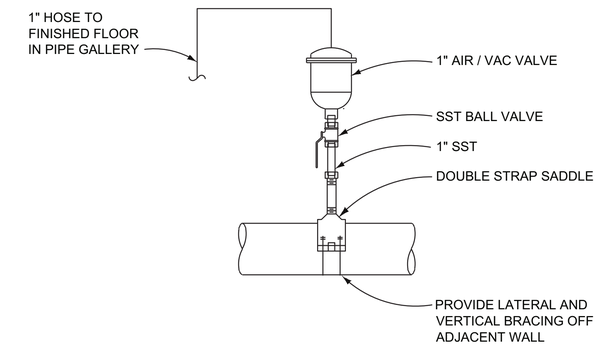

AIR / VAC VALVE
NTS

"THESE RECORD DRAWINGS HAVE BEEN PREPARED BASED ON INFORMATION PROVIDED BY OTHERS. THE ENGINEER HAS NOT VERIFIED THE ACCURACY OF THIS INFORMATION AND SHALL NOT BE RESPONSIBLE FOR ANY ERRORS OR OMISSIONS WHICH MAY BE INCORPORATED HEREIN AS A RESULT."

VERIFY SCALES
BAR IS ONE INCH ON ORIGINAL DRAWING.
0" 1"
IF NOT ONE INCH ON THIS DRAWING, ADJUST SCALES ACCORDINGLY.

NO.	DATE	REVISION	BY	CHK.
1	12 / 2015	RECORD DRAWINGS		

DESIGNED BY: RJA
DRAWN BY: JFA
CHECKED BY: RJA
DATE: FEBRUARY 2015

Hatch Mott MacDonald

CITY OF LOUISVILLE, COLORADO
HOWARD BERRY
WATER TREATMENT PLANT
SOLIDS HANDLING IMPROVEMENTS

EXISTING PROCESS BUILDING
LOWER LEVEL SECTIONS
NEW SLUDGE WASTE LINE

PROJECT NO. 336016
SHEET NO. P3
DWG. 21 OF 42

12/15/15 15:56 ARC56862 R19 P:\336016 - LOUISVILLE SOUTH WTP SOLIDS HANDLING\RECORD DRAWINGS\-PROCESS\P2 P3.DWG XREFS: P:\336016 - LOUISVILLE SOUTH WTP SOLIDS HANDLING\-XREF-SWL PUMP.JPG; P:\336016 - LOUISVILLE SOUTH WTP SOLIDS HANDLING\-XREF-SWL PUMP.JPG; P:\336016 - LOUISVILLE SOUTH WTP SOLIDS HANDLING\-XREF\20141118_155306.JPG;
IMAGES: P:\336016 - LOUISVILLE SOUTH WTP SOLIDS HANDLING\-XREF\20141118_155306.JPG;

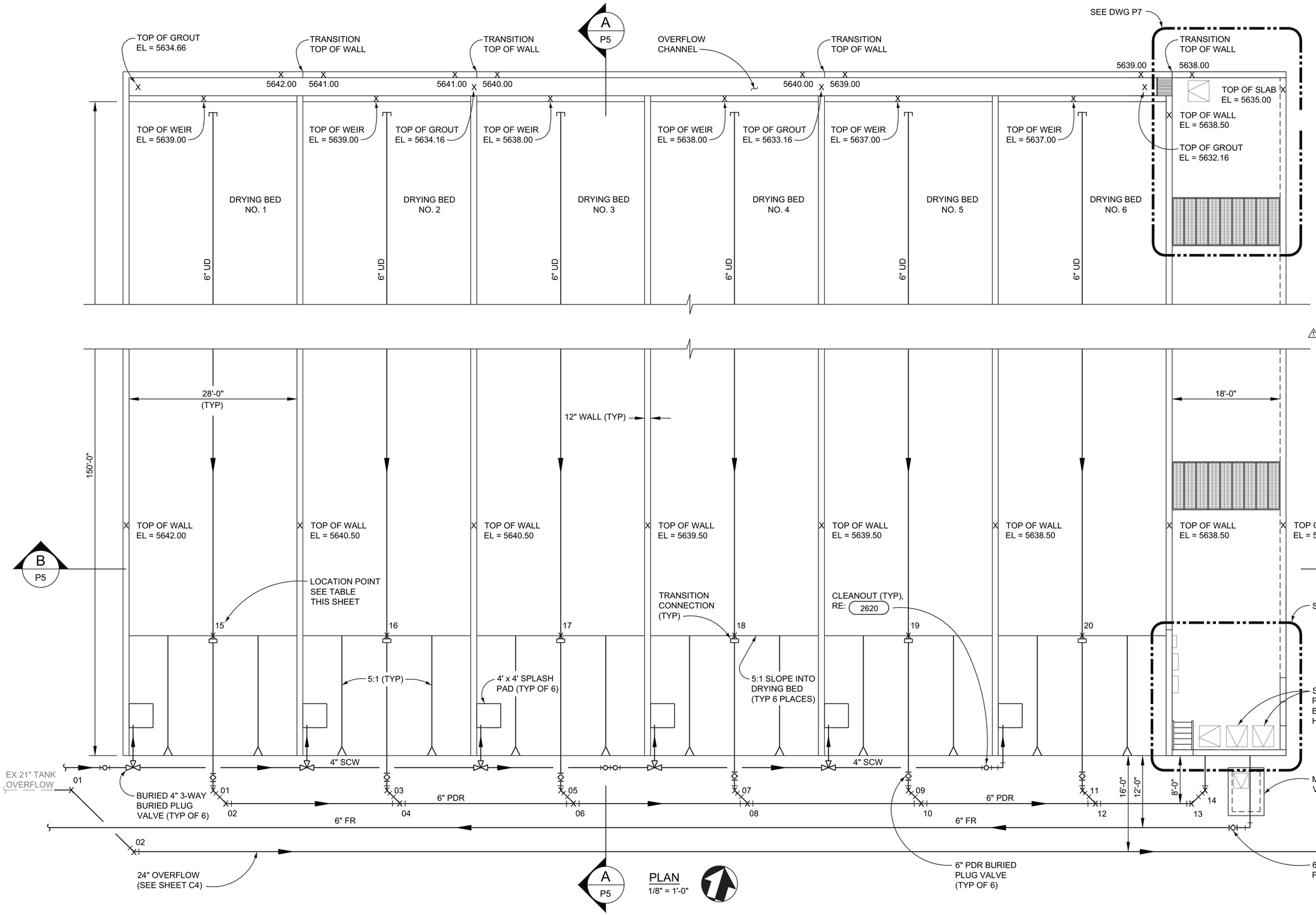

PIPE LOCATION TABLE

6" PDR	NORTHING	EASTING	TOP OF PIPE ELEV.
01	1775681.52	3088196.21	5635.34
02	1775679.41	3088199.87	5635.16
03	1775687.50	3088224.75	5635.33
04	1775685.49	3088227.35	5634.80
05	1775693.28	3088253.28	5634.15
06	1775692.69	3088256.45	5634.08
07	1775700.10	3088281.41	5634.14
08	1775698.21	3088294.40	5633.58
09	1775706.24	3088309.32	5633.17
10	1775704.50	3088311.93	5633.15
11	1775712.40	3088337.62	5633.22
12	1775710.38	3088340.43	5632.90
13	1775713.83	3088356.09	5632.72
14	1775716.37	3088357.52	5632.68
15	1775709.09	3088190.47	5635.62
16	1775715.27	3088218.38	5635.61
17	1775721.67	3088246.88	5634.58
18	1775727.71	3088275.12	5634.63
19	1775734.11	3088303.48	5633.62
20	1775740.63	3088331.61	5633.64

24" OVERFLOW			
01	1775678.11	3088176.31	5638.25
02	1775669.37	3088189.64	5638.08

1 "THESE RECORD DRAWINGS HAVE BEEN PREPARED BASED ON INFORMATION PROVIDED BY OTHERS. THE ENGINEER HAS NOT VERIFIED THE ACCURACY OF THIS INFORMATION AND SHALL NOT BE RESPONSIBLE FOR ANY ERRORS OR OMISSIONS WHICH MAY BE INCORPORATED HEREIN AS A RESULT."

VERIFY SCALES
BAR IS ONE INCH ON ORIGINAL DRAWING.
0" 1"
IF NOT ONE INCH ON THIS DRAWING, ADJUST SCALES ACCORDINGLY.

NO.	DATE	REVISION	BY	CHK.
1	12 / 2015	RECORD DRAWINGS		

DESIGNED BY: RJA
DRAWN BY: JFA
CHECKED BY: RJA
DATE: FEBRUARY 2015

Hatch Mott MacDonald

CITY OF LOUISVILLE, COLORADO
HOWARD BERRY
WATER TREATMENT PLANT
SOLIDS HANDLING IMPROVEMENTS

DRYING BEDS PLAN

PROJECT NO. 336016
SHEET NO. P4
DWG. 22 OF 42

12/21/15 11:50 ARC56862 R19 P:\336016 - LOUISVILLE SOUTH WTP SOLIDS HANDLING\RECORD DRAWINGS\6-PROCESS\P4 - P7.DWG XREFS: P:\336016 - LOUISVILLE SOUTH WTP SOLIDS HANDLING\RECORD DRAWINGS\1-XREF\X-TITLE.DWG;

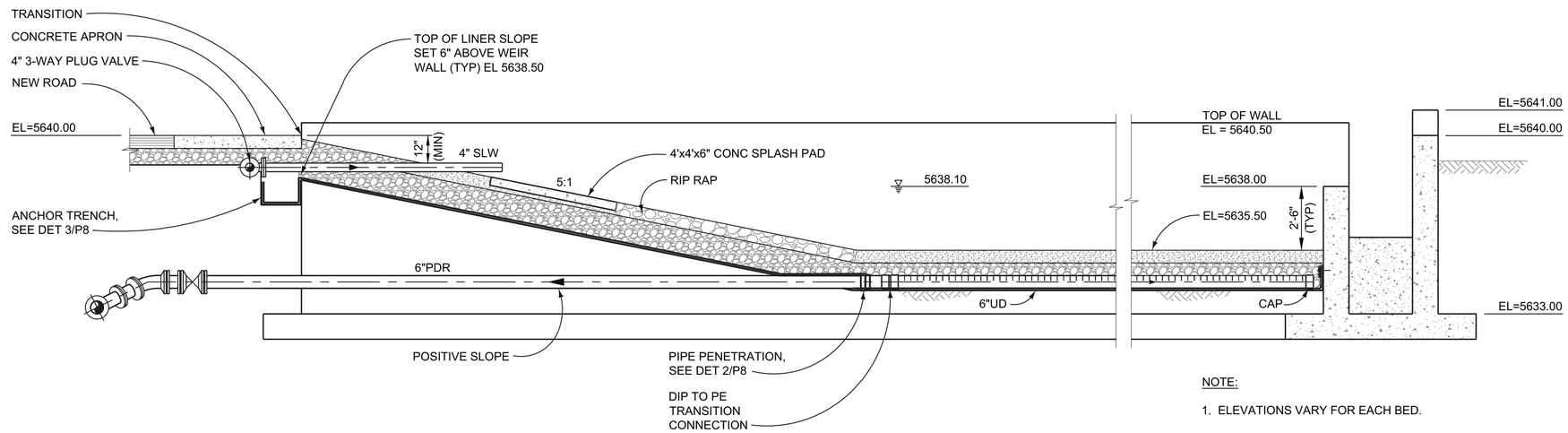

NOTE:

1. ELEVATIONS VARY FOR EACH BED.

SECTION - DRYING BED NO. 3 / TYPICAL (A / P4)

3/8"=1'-0"

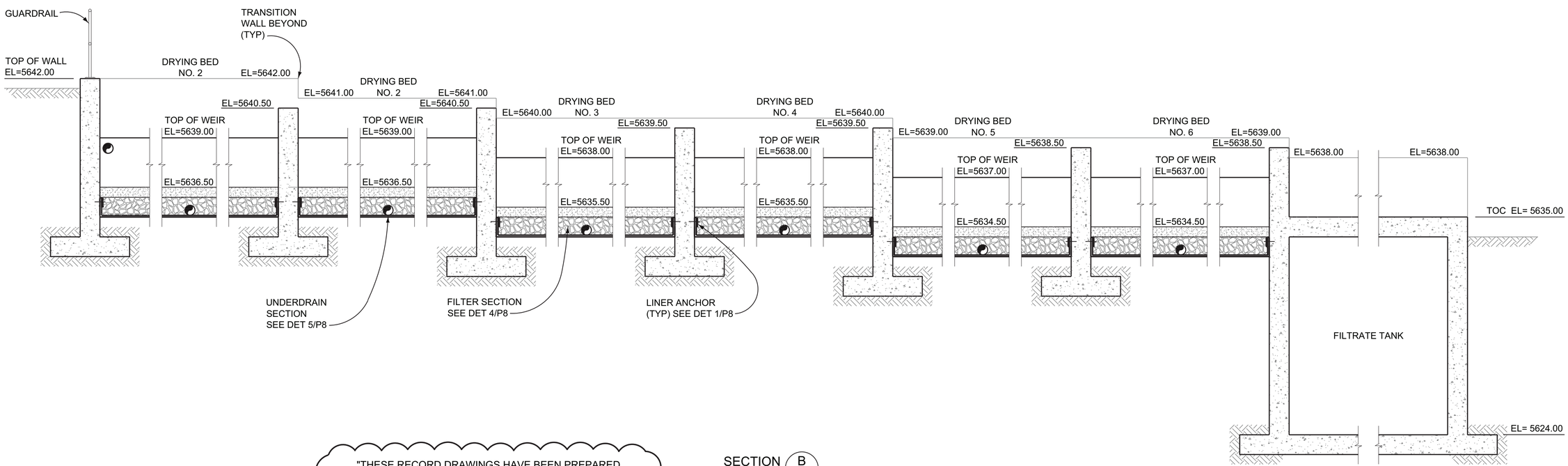

SECTION (B / P4)

3/8"=1'-0"

"THESE RECORD DRAWINGS HAVE BEEN PREPARED BASED ON INFORMATION PROVIDED BY OTHERS. THE ENGINEER HAS NOT VERIFIED THE ACCURACY OF THIS INFORMATION AND SHALL NOT BE RESPONSIBLE FOR ANY ERRORS OR OMISSIONS WHICH MAY BE INCORPORATED HEREIN AS A RESULT."

VERIFY SCALES

BAR IS ONE INCH ON ORIGINAL DRAWING.

0" 1"

IF NOT ONE INCH ON THIS DRAWING, ADJUST SCALES ACCORDINGLY.

NO.	DATE	REVISION	BY	CHK.
1	12 / 2015	RECORD DRAWINGS		

DESIGNED BY: RJA
DRAWN BY: JFA
CHECKED BY: RJA
DATE: FEBRUARY 2015

Hatch Mott MacDonald

CITY OF LOUISVILLE, COLORADO
HOWARD BERRY
WATER TREATMENT PLANT
SOLIDS HANDLING IMPROVEMENTS

DRYING BEDS SECTIONS

PROJECT NO. 336016
SHEET NO. P5
DWG. 23 OF 42

12/21/15 11:50 ARC56862 R19 P:\336016 - LOUISVILLE SOUTH WTP SOLIDS HANDLING\RECORD DRAWINGS\6-PROCESS\P4 - P7.DWG XREFS: P:\336016 - LOUISVILLE SOUTH WTP SOLIDS HANDLING\RECORD DRAWINGS\1-XREFX-TITLE.DWG;

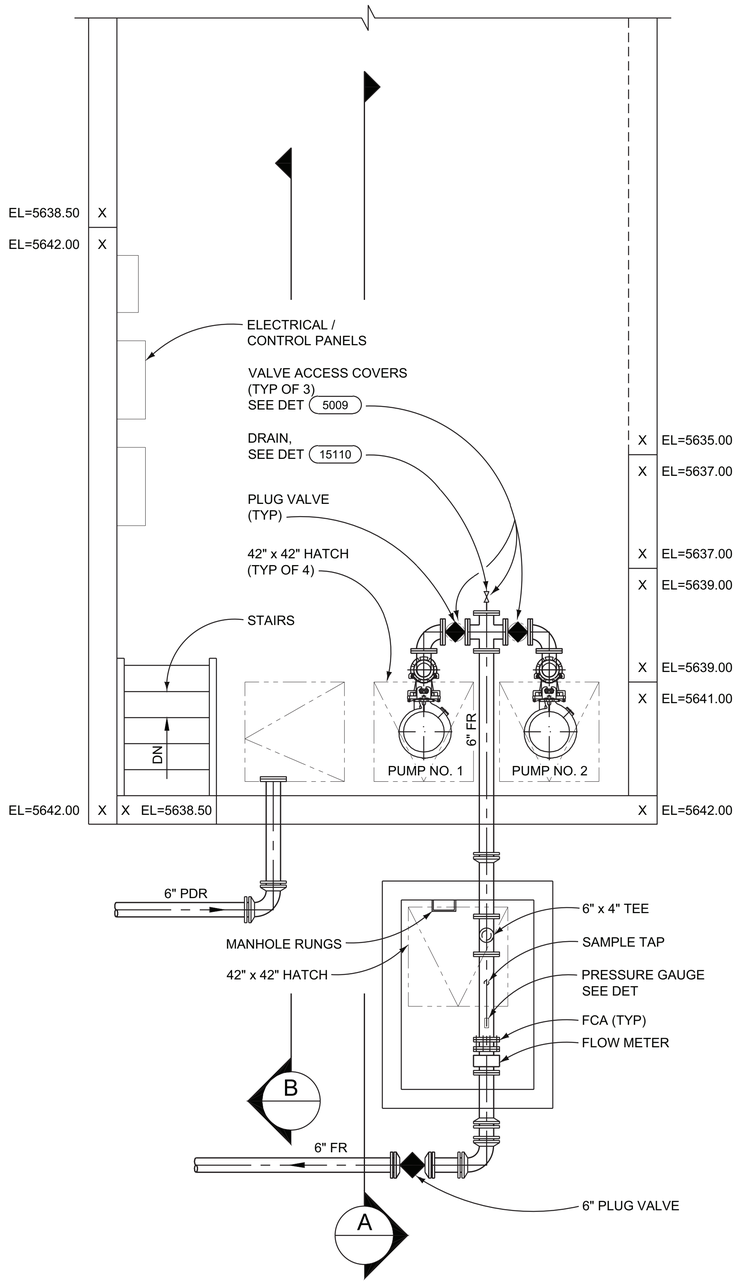

PLAN
3/8" = 1'-0"

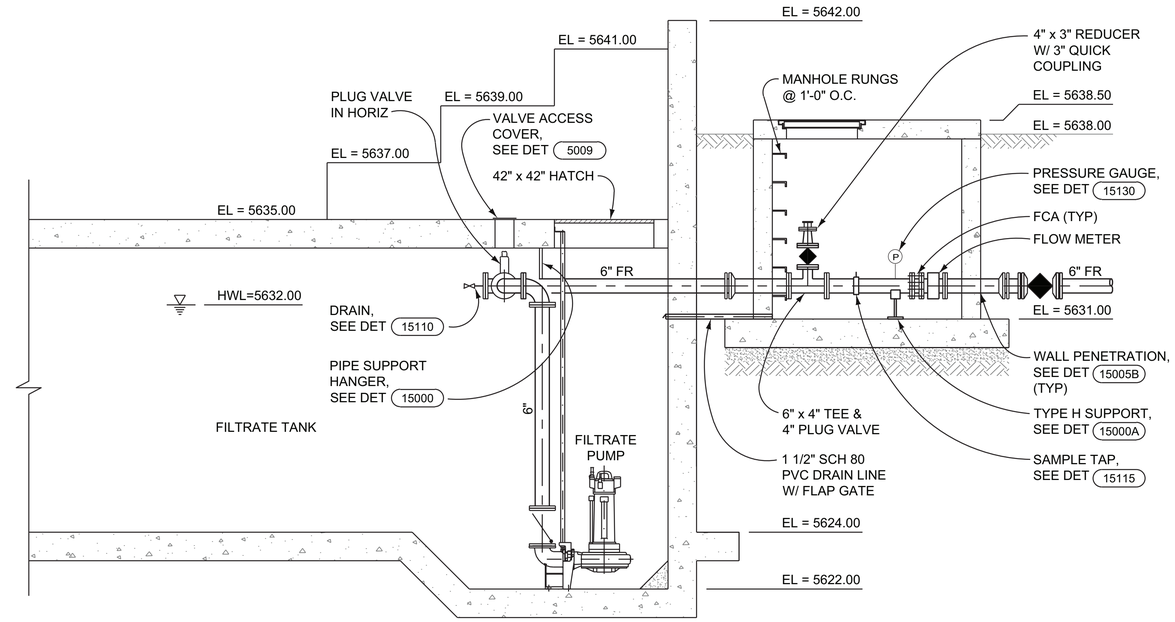

SECTION A
3/8"=1'-0"
P6

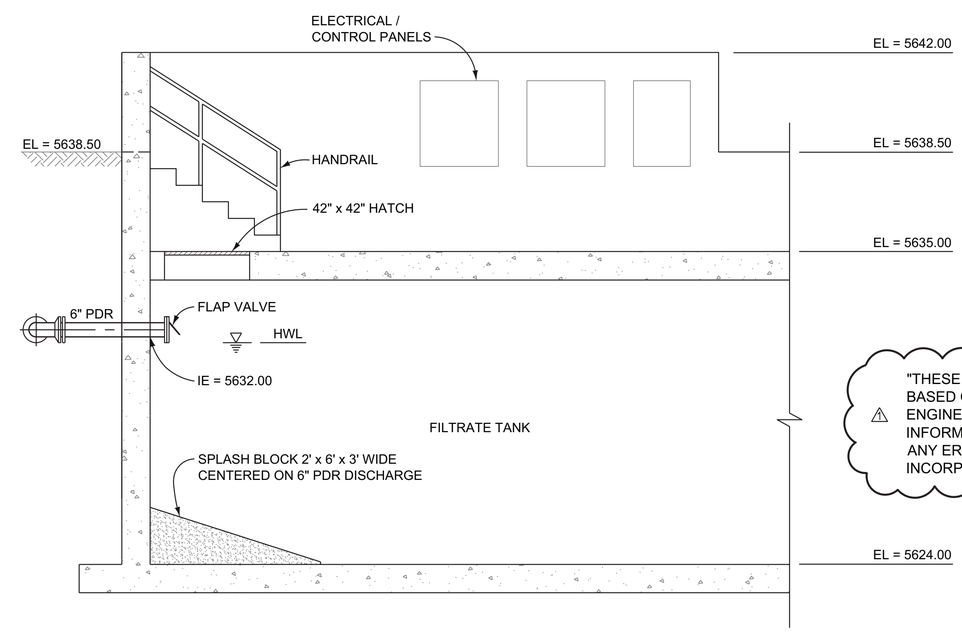

SECTION B
3/8"=1'-0"
P6

"THESE RECORD DRAWINGS HAVE BEEN PREPARED BASED ON INFORMATION PROVIDED BY OTHERS. THE ENGINEER HAS NOT VERIFIED THE ACCURACY OF THIS INFORMATION AND SHALL NOT BE RESPONSIBLE FOR ANY ERRORS OR OMISSIONS WHICH MAY BE INCORPORATED HEREIN AS A RESULT."

VERIFY SCALES
BAR IS ONE INCH ON ORIGINAL DRAWING.
0" 1"
IF NOT ONE INCH ON THIS DRAWING, ADJUST SCALES ACCORDINGLY.

NO.	DATE	REVISION	BY	CHK.
1	12 / 2015	RECORD DRAWINGS		

DESIGNED BY: RJA
DRAWN BY: JFA
CHECKED BY: RJA
DATE: FEBRUARY 2015

Hatch Mott MacDonald

CITY OF LOUISVILLE, COLORADO
HOWARD BERRY
WATER TREATMENT PLANT
SOLIDS HANDLING IMPROVEMENTS

FILTRATE PUMP STATION
PLAN AND SECTIONS

PROJECT NO. 336016
SHEET NO. P6
DWG. 24 OF 42

12/21/15 11:50 ARC56862 R19 P:\336016 - LOUISVILLE SOUTH WTP SOLIDS HANDLING\RECORD DRAWINGS\6-PROCESS\P4 - P7.DWG XREFS: P:\336016 - LOUISVILLE SOUTH WTP SOLIDS HANDLING\RECORD DRAWINGS\1-XREFX-TITLE.DWG;

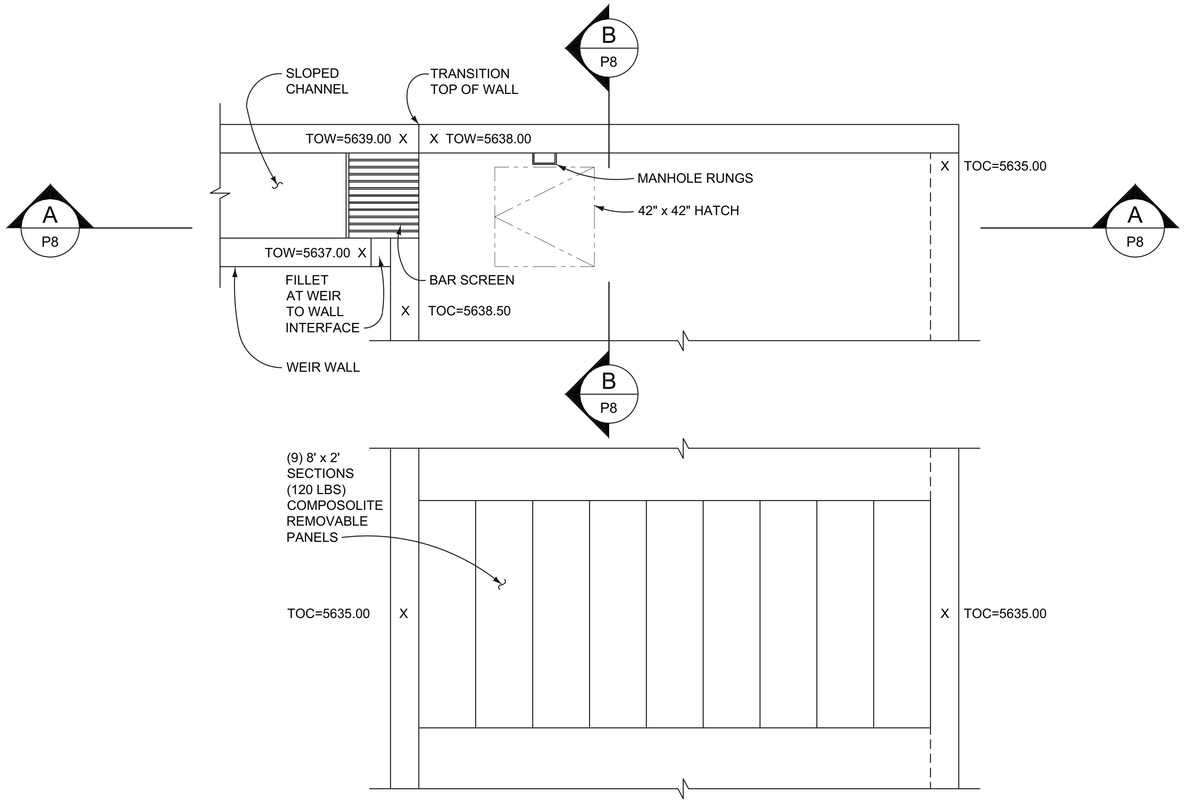

PLAN
3/8"=1'-0"

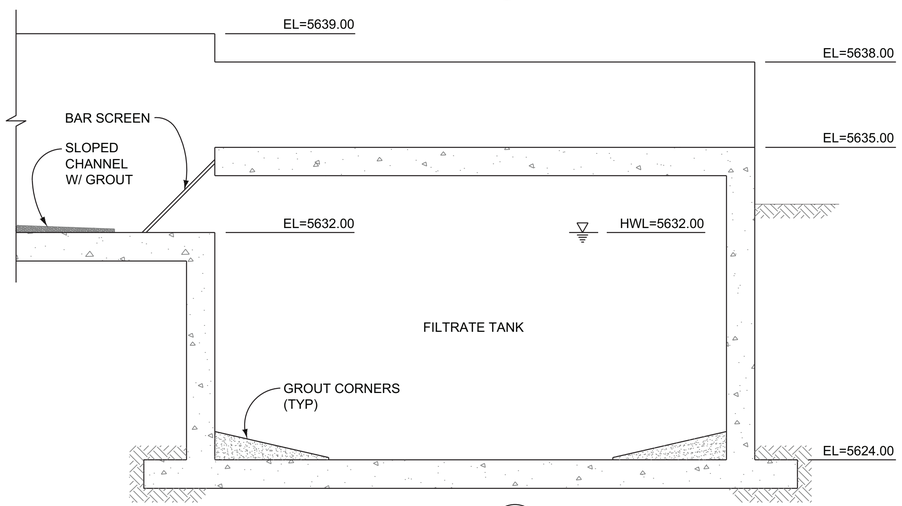

SECTION A
3/8"=1'-0"

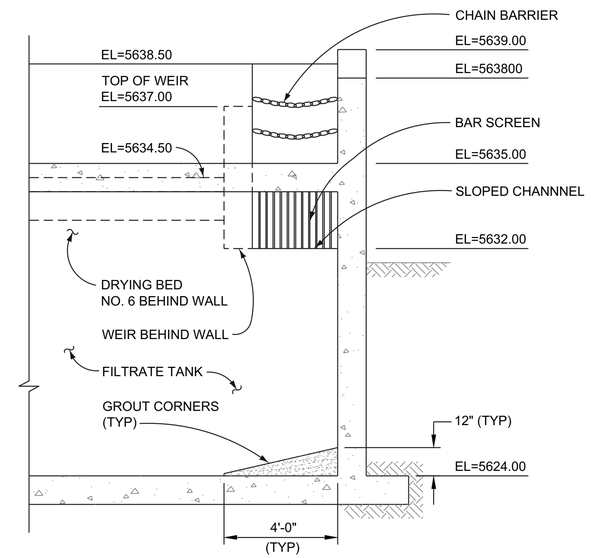

SECTION B
3/8"=1'-0"

"THESE RECORD DRAWINGS HAVE BEEN PREPARED BASED ON INFORMATION PROVIDED BY OTHERS. THE ENGINEER HAS NOT VERIFIED THE ACCURACY OF THIS INFORMATION AND SHALL NOT BE RESPONSIBLE FOR ANY ERRORS OR OMISSIONS WHICH MAY BE INCORPORATED HEREIN AS A RESULT."

VERIFY SCALES
BAR IS ONE INCH ON ORIGINAL DRAWING.
0" 1"
IF NOT ONE INCH ON THIS DRAWING, ADJUST SCALES ACCORDINGLY.

NO.	DATE	REVISION	BY	CHK.
1	12 / 2015	RECORD DRAWINGS		

DESIGNED BY: RJA
DRAWN BY: JFA
CHECKED BY: RJA
DATE: FEBRUARY 2015

Hatch Mott MacDonald

CITY OF LOUISVILLE, COLORADO
HOWARD BERRY
WATER TREATMENT PLANT
SOLIDS HANDLING IMPROVEMENTS

FILTRATE TANK
OVERFLOW CHANNEL
PLAN AND SECTIONS

PROJECT NO. 336016
SHEET NO. P7
DWG. 25 OF 42

12/21/15 11:50 ARC56862 R19 P:\336016 - LOUISVILLE SOUTH WTP SOLIDS HANDLING\RECORD DRAWINGS\6-PROCESS\P4 - P7.DWG XREFS: P:\336016 - LOUISVILLE SOUTH WTP SOLIDS HANDLING\RECORD DRAWINGS\1-XREFX-TITLE.DWG;

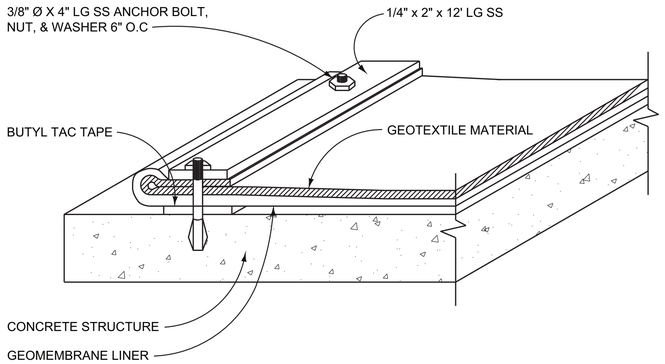

CONCRETE ANCHOR DETAIL

DETAIL 1 / P8
NTS

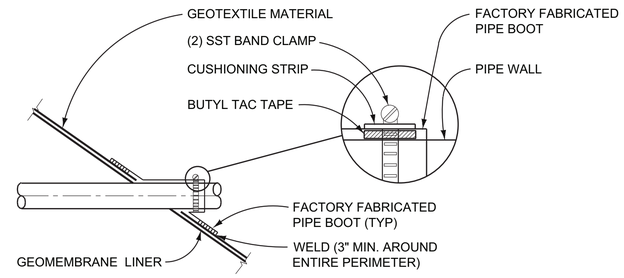

PIPE PENETRATION DETAIL

DETAIL 2 / P8
NTS

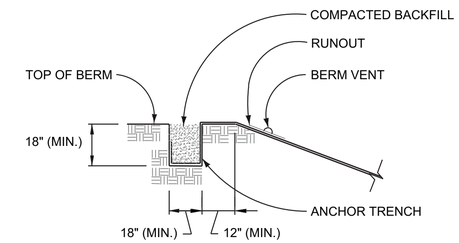

ANCHOR TRENCH

DETAIL 3 / P8
NTS

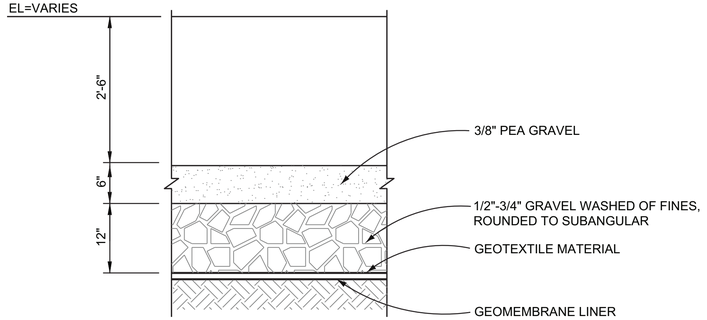

SECTION - DRYING BED FILTER 4 / P8
NTS

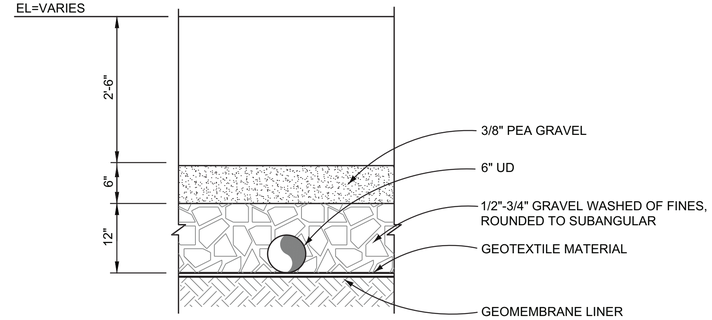

SECTION - DRYING BED UNDERDRAIN 5 / P8
NTS

"THESE RECORD DRAWINGS HAVE BEEN PREPARED BASED ON INFORMATION PROVIDED BY OTHERS. THE ENGINEER HAS NOT VERIFIED THE ACCURACY OF THIS INFORMATION AND SHALL NOT BE RESPONSIBLE FOR ANY ERRORS OR OMISSIONS WHICH MAY BE INCORPORATED HEREIN AS A RESULT."

VERIFY SCALES
BAR IS ONE INCH ON ORIGINAL DRAWING.
0" 1"
IF NOT ONE INCH ON THIS DRAWING, ADJUST SCALES ACCORDINGLY.

NO.	DATE	REVISION	BY	CHK.
1	12 / 2015	RECORD DRAWINGS		

DESIGNED BY: RJA
DRAWN BY: JFA
CHECKED BY: RJA
DATE: FEBRUARY 2015

Hatch Mott MacDonald

CITY OF LOUISVILLE, COLORADO
HOWARD BERRY
WATER TREATMENT PLANT
SOLIDS HANDLING IMPROVEMENTS

DRYING BEDS
SECTIONS AND DETAILS

PROJECT NO. 336016
SHEET NO. P8
DWG. 26 OF 42

12/15/15 15:20 ARC56862 R19 P:\336016 - LOUISVILLE SOUTH WTP SOLIDS HANDLING\RECORD DRAWINGS\6-PROCESS\P8.DWG XREFS: P:\336016 - LOUISVILLE SOUTH WTP SOLIDS HANDLING\RECORD DRAWINGS\1-XREFS\X-TITLE.DWG;

DUCT BANK LOCATION TABLE

POINT	NORTHING	EASTING	TOP OF CONDUIT ELEV.
01	1775662.84	3087630.22	5651.94
02	1775660.45	3087661.50	5648.90
03	1775662.48	3087728.78	5646.06
04	1775625.49	3087777.10	5644.02
05	1775633.09	3087817.05	5643.43
06	1775640.53	3087926.34	5641.28
07	1775640.15	3087947.73	5640.95
08	1775633.73	3087980.92	5641.40
09	1775631.05	3088001.31	5642.26
10	1775639.89	3088097.00	5641.05
11	1775658.22	3088185.19	5638.51
12	1775676.01	3088271.26	5636.80
13	1775688.28	3088356.09	5633.37
14	1775720.02	3088351.52	5634.46

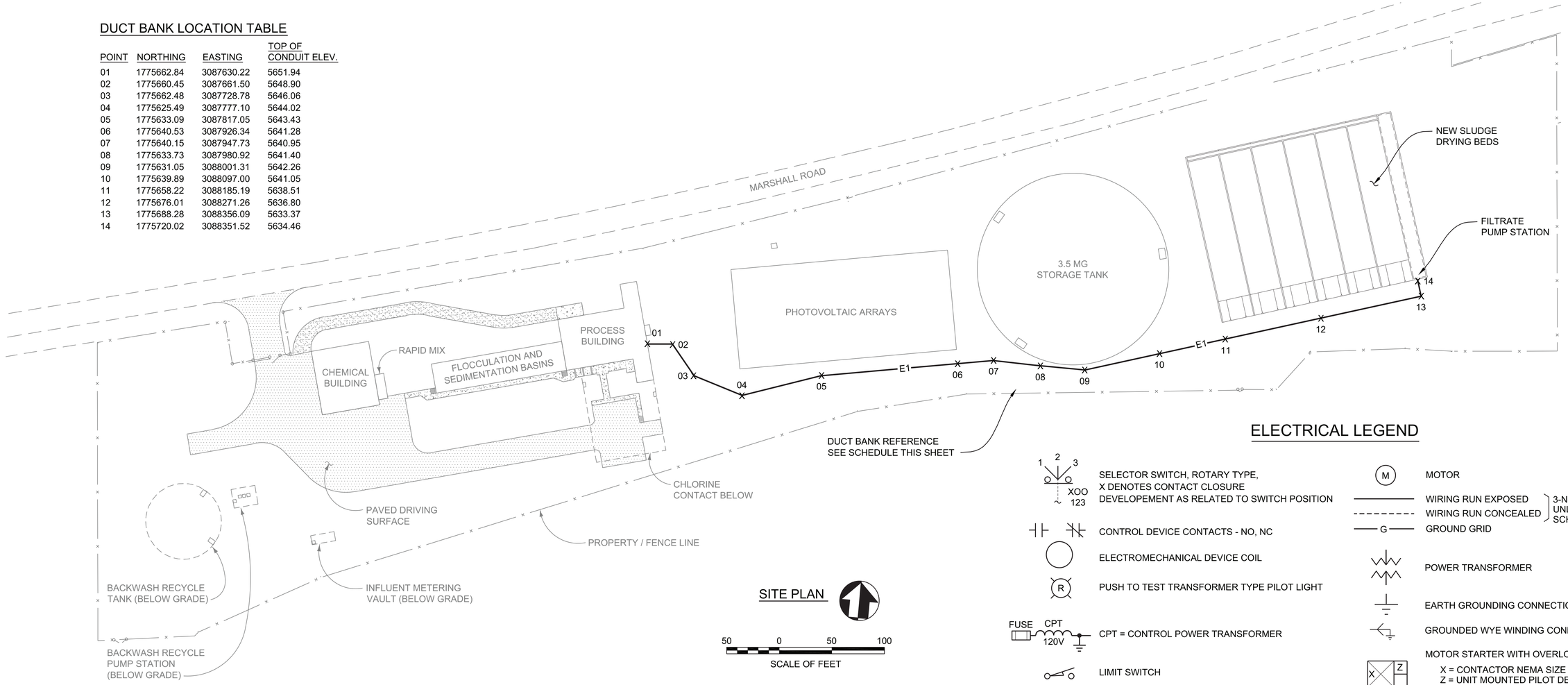

SITE PLAN

50 0 50 100

SCALE OF FEET

ELECTRICAL LEGEND

- SELECTOR SWITCH, ROTARY TYPE, X DENOTES CONTACT CLOSURE DEVELOPEMENT AS RELATED TO SWITCH POSITION (1 2 3; XOO 123)
- CONTROL DEVICE CONTACTS - NO, NC
- ELECTROMECHANICAL DEVICE COIL
- PUSH TO TEST TRANSFORMER TYPE PILOT LIGHT
- FUSE CPT 120V — CPT = CONTROL POWER TRANSFORMER
- LIMIT SWITCH
- TEMPERATURE SWITCH
- LIGHTING SWITCH (S a WP) — WP = WEATHERPROOF; a = SWITCHED FIXTURE REFERENCE
- JUNCTION BOX
- [F] — DENOTES FIELD MOUNTED EQUIPMENT
- EX, [E] — DENOTES EXISTING
- S N4 — MANUAL MOTOR STARTER; N4 = NEMA ENCLOSURE CLASS
- LP/2 — BRANCH CIRCUIT DESIGNATION; LP = PANEL ID, 2 = CKT NUMBER
- WP — DUPLEX GROUNDED RECEPTACLE; WP = WEATHERPROOF
- X Y — FIXTURE REFERENCE; X = TYPE, Y = INPUT WATTS
- M — MOTOR
- WIRING RUN EXPOSED / WIRING RUN CONCEALED — 3-NO. 12, 3/4" C UNLESS NOTED OR SCHEDULED
- G — GROUND GRID
- POWER TRANSFORMER
- EARTH GROUNDING CONNECTION
- GROUNDED WYE WINDING CONNECTION
- MOTOR STARTER WITH OVERLOADS; X = CONTACTOR NEMA SIZE; Z = UNIT MOUNTED PILOT DEVICE; A = RED/GREEN LIGHTS; B = 6 DIGIT RUN TIME METER; C = HAND-OFF-AUTO SWITCH; D = OFF-RUN SWITCH; RVSS = REDUCED VOLTAGE SOLID STATE
- 15/3 TM — AIR CIRCUIT BREAKER; AMPS/POLES; TM = THERMAL MAGNETIC; MCP = MOTOR CIRCUIT PROTECTOR
- SPD — SURGE PROTECTIVE DEVICE
- FUSE, RATING AND TYPE SHOWN
- WH — UTILITY METER
- STB — SHORTING TERMINAL BOX
- CT — CURRENT TRANSFORMER

DUCT BANK CONDUIT SCHEDULE

MARK	FROM	TO	QTY	SIZE	DESCRIPTION	VOLTAGE
E1-1	MDC	PANEL H	1	3"	FEEDER: FILTRATE PUMP STATION	480
E1-2	PROCESS PLC PANEL CP 100	STATION PLC PANEL CP 105	1	2"	FIBER OPTIC TRUNK	
E1-3	PROCESS LOWER LEVEL	PUMP STATION	1	2"	SPARE	

NOTES:

1. ALL CONDUITS DIRECT BURY 30" BELOW GRADE WITHIN 3" ENVELOPE OF PIPE BEDDING MATERIAL.

"THESE RECORD DRAWINGS HAVE BEEN PREPARED BASED ON INFORMATION PROVIDED BY OTHERS. THE ENGINEER HAS NOT VERIFIED THE ACCURACY OF THIS INFORMATION AND SHALL NOT BE RESPONSIBLE FOR ANY ERRORS OR OMISSIONS WHICH MAY BE INCORPORATED HEREIN AS A RESULT."

VERIFY SCALES

BAR IS ONE INCH ON ORIGINAL DRAWING.

0" 1"

IF NOT ONE INCH ON THIS DRAWING, ADJUST SCALES ACCORDINGLY.

NO.	DATE	REVISION	BY	CHK.

DESIGNED BY: RJS
DRAWN BY: CBD
CHECKED BY: RJS
DATE: FEBRUARY 2015

Hatch Mott MacDonald

RSE
RUSS SASAKURA ENGINEERING
LITTLETON, COLORADO

CITY OF LOUISVILLE, COLORADO
HOWARD BERRY
WATER TREATMENT PLANT
SOLIDS HANDLING IMPROVEMENTS

SITE PLAN, LEGEND

PROJECT NO. 336016
SHEET NO. E1
DWG. 27 OF 42

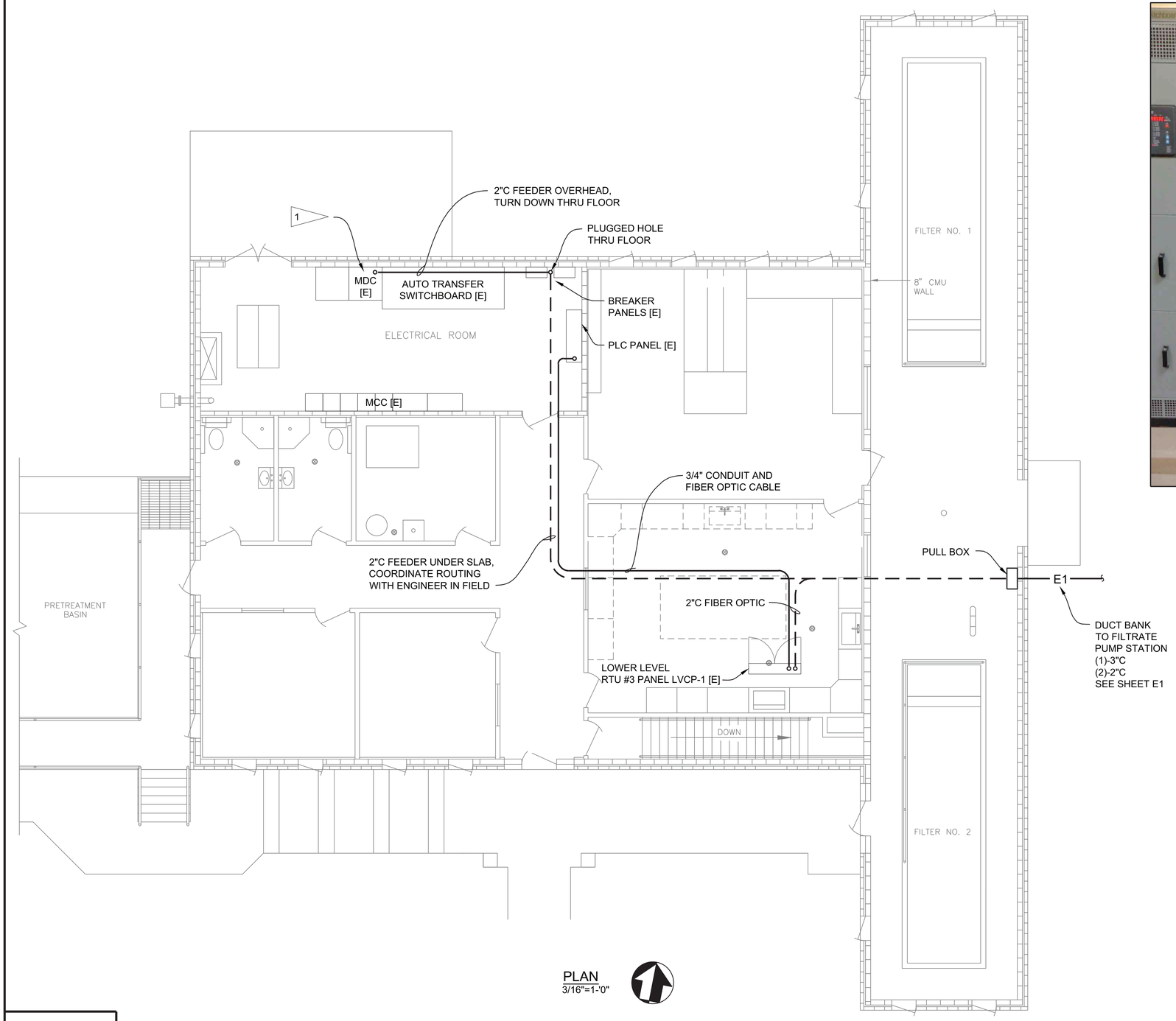

PLAN
3/16"=1'-0"

MDC ELEVATION

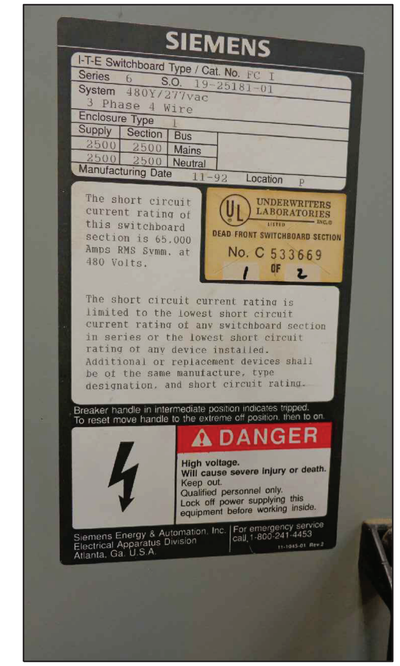

MDC NAMEPLATE

FLAG NOTES:

1 INSTALL NEW 250 AMP FRAME, 100 AMP TRIP THERMAL MAGNETIC FEEDER BREAKER IN SPARE EQUIPPED SPACE IN SWITCHBOARD MDC.
MATCH EXISTING SIMILAR EQUIPMENT PER MDC NAMEPLATE IN PHOTO. PROVIDE FEEDER NAMEPLATE SIMILAR TO EXISTING ENGRAVED "FILTRATE PUMP STATION FEEDER"

"THESE RECORD DRAWINGS HAVE BEEN PREPARED BASED ON INFORMATION PROVIDED BY OTHERS. THE ENGINEER HAS NOT VERIFIED THE ACCURACY OF THIS INFORMATION AND SHALL NOT BE RESPONSIBLE FOR ANY ERRORS OR OMISSIONS WHICH MAY BE INCORPORATED HEREIN AS A RESULT."

COLORADO REGISTERED PROFESSIONAL ENGINEER
RUSSELL J. SASAKURA
16149
2/23/15

VERIFY SCALES
BAR IS ONE INCH ON ORIGINAL DRAWING.
0" 1"
IF NOT ONE INCH ON THIS DRAWING, ADJUST SCALES ACCORDINGLY.

NO.	DATE	REVISION	BY	CHK.

DESIGNED BY: RJS
DRAWN BY: CBD
CHECKED BY: RJS
DATE: FEBRUARY 2015

Hatch Mott MacDonald

RSE
RUSS SASAKURA ENGINEERING
LITTLETON, COLORADO

CITY OF LOUISVILLE, COLORADO
HOWARD BERRY
WATER TREATMENT PLANT
SOLIDS HANDLING IMPROVEMENTS

PROCESS BUILDING PLAN

PROJECT NO. 336016
SHEET NO. E2
DWG. 28 OF 42

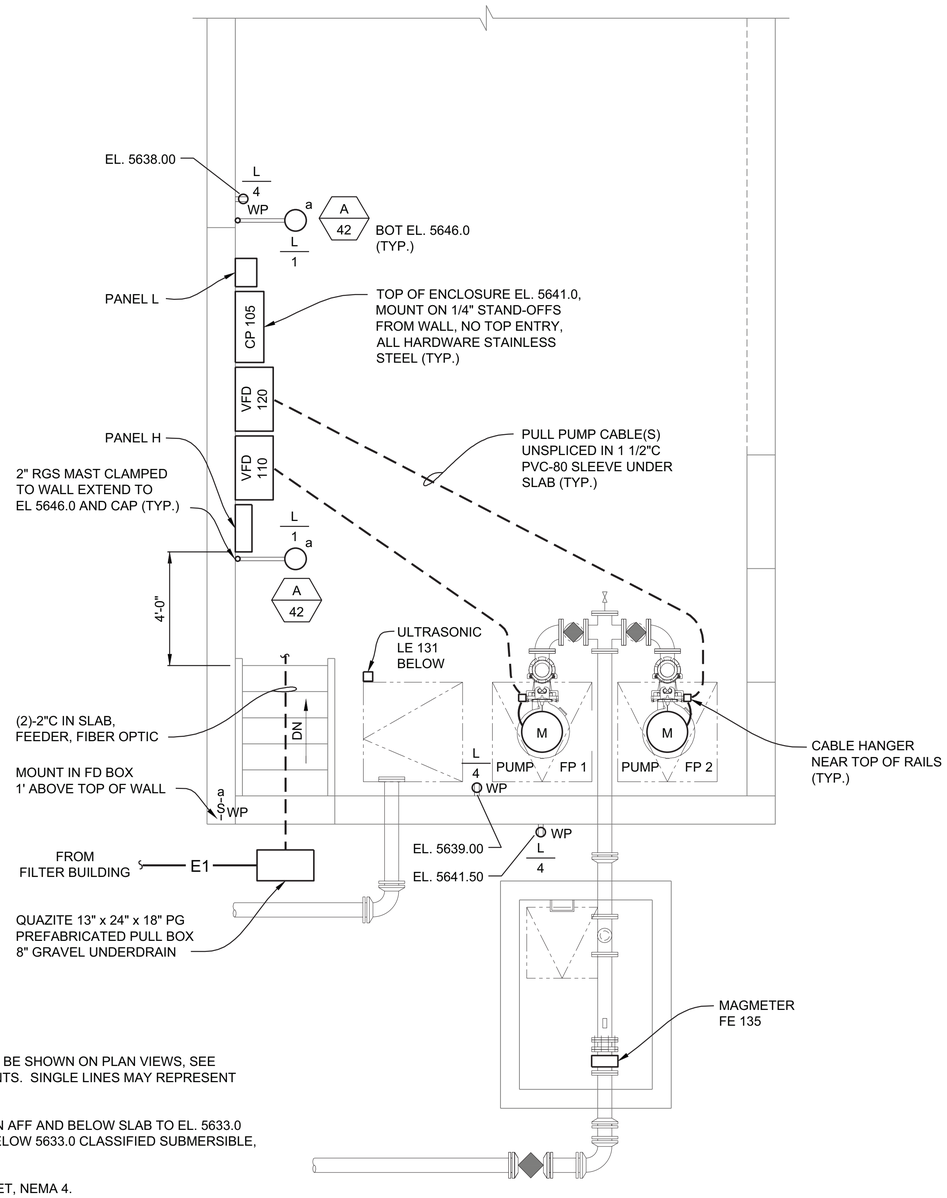

NOTES:

1. ALL CONDUIT RUNS MAY NOT BE SHOWN ON PLAN VIEWS, SEE ONE-LINES FOR REQUIREMENTS. SINGLE LINES MAY REPRESENT MULTIPLE CONDUITS.
2. ALL AREAS OF PUMP STATION AFF AND BELOW SLAB TO EL. 5633.0 CLASSIFIED WET, NEMA 4. BELOW 5633.0 CLASSIFIED SUBMERSIBLE, NEMA 6.
3. METER VAULT CLASSIFIED WET, NEMA 4.

PLAN
3/8" = 1'-0"

DUSK-TO-DAWN DDL

MULTIPURPOSE LED LUMINAIRE

Cat.# DDL-9L1 with 30" arm

Job: Louisville, Colorado

Type: A

HUBBELL Outdoor Lighting

Approvals

SPECIFICATIONS

Intended Use:
Multi-purpose dusk-to-dawn LED luminare provides general purpose area, security, roadway and landscape lighting. For operation in -35˚C - 40˚C ambient temperatures.

Construction:
- Rugged die-cast aluminum housing with both 2-3/8" & 1-5/8" OD mast arm mount capability as well as direct wall/ surface mounting; Textured gray powder paint provides corrosion resistance and clean finish

LED (Choice of):

DDL-9L – 40w, 86 LPW
- 9 high power LEDs deliver 3437 lumens with symmetrical lens and 3246 with asymmetrical lens, 5000K CCT, 67 CRI

DDL-56L – 30w, 97 LPW
- 56 mid power LEDs deliver 2906 lumens, 4000K CCT, 80 CRI

DDL-140L – 43.5w, 121 LPW
- 140 mid power LEDs deliver 5279 lumens, 5000K CCT, 80 CRI

Optical/Electrical:
- Symmetric LED lens installed standard
- DDL-9L only: Field rotatable asymmetric LED lens included for pathway/ roadway applications
- Single 120V 50/60Hz driver (Surge protection integral with driver)
- 120V twist-lock style photocontrol included

Optical/Electrical:
- Provides zero uplight design for environmentally friendly installations

Installation:
Versatile mounting options include:
- Three 1/4" slots for wall/surface
- 24" (18" projection) aluminum mast arm included for DDL-9L and DDL-140L only; Arm not included for DDL-56L
- Mast arm clamp adjusts to 2-3/8"or 1-5/8" OD arms

Listings:
- DDL-9L and DDL-56L models meet DesignLights Consortium (DLC) qualifications, consult DLC website for more details: http://www.designlights.org/QPL
- Listed to UL1598 for use in wet locations
- Driver IP66 and RoHS compliant
- EPA = 0.5
- ANSI 3G Rated

Warranty:
For more information visit:
http://www.hubbelloutdoor.com/resources/warranty/

PRODUCT IMAGE(S)

DIMENSIONS

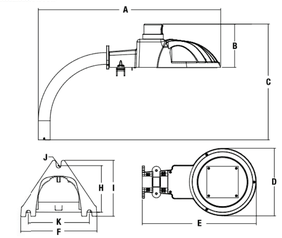

A	B	C	D	E
29.72"	6"	16.19"	9.45"	16"
754 mm	152 mm	411 mm	240 mm	406 mm
F	**G**	**H**	**I**	**J**
3.62"	4.52"	2.74"	3.29"	.138"
92 mm	115 mm	69 mm	84 mm	3.5 mm

SHIPPING INFORMATION

Catalog Number	G.W(kg)/ CTN	Carton Dimensions		
		Length Inch (cm)	Width Inch (cm)	Height Inch (cm)
DDL (Single carton 1pc.)	4.57	17.83"	14.49"	7.68"
DDL (Master carton 2 pcs.)	10.00	18.23"	14.88"	16.34"

Carton dimensions for shipping purposes only – Pallet Quantity 40

CERTIFICATIONS/LISTINGS

LED DLC **ANSI 3G Rated**

*DDL-9L and DDL-56L DesignLights Consortium (DLC) Qualified

ORDERING INFORMATION

Catalog Number	Construction	Mount	Wattage	Drive Current	Voltage	Color Temperature	Lumens	LPW	Weight lbs. (kg)
DDL-9L1*	Die-cast aluminum	Arm included	40	1280mA	120V	5000K	3437	86	6.8 (3.08)
DDL-56L-4K-1-NA	Die-cast aluminum	Arm not included	30	150mA	120V	4000K	2906	97	6.8 (3.08)
DDL-140L-1	Die-cast aluminum	Arm included	43.5	92mA	120V	5000K	5279	121	6.8 (3.08)

REPLACEMENT PARTS (ORDER SEPARATELY)

Catalog Number	Description
ARM-DD24	24" aluminum arm with hardware
ARM-DD30	30" aluminum arm with hardware
DDL-DRIVER-120V	Driver for DDL-9L (120V)
DDL-DRIVER-56	Driver for DDL-56L (120V)
DDL-DRIVER-140	Driver for DDL-140L (120V)

Catalog Number	Description
DDL-LENS-140	LED Symmetric lens for DDL-140L
DDL-LENS2	LED Asymmetric lens for DDL-9L
DDL-LENS5	LED Symmetric lens for DDL-9L or DDL-56L

HUBBELL Outdoor Lighting
Hubbell Outdoor Lighting • 701 Millennium Boulevard • Greenville, SC 29607 • Phone: 864-678-1000
Due to our continued efforts to improve our products, product specifications are subject to change without notice.
© 2014 HUBBELL OUTDOOR LIGHTING, All Rights Reserved • For more information visit our website: **www.hubbelloutdoor.com** • Printed in USA
DDL9LED-SPEC-12/14

"THESE RECORD DRAWINGS HAVE BEEN PREPARED BASED ON INFORMATION PROVIDED BY OTHERS. THE ENGINEER HAS NOT VERIFIED THE ACCURACY OF THIS INFORMATION AND SHALL NOT BE RESPONSIBLE FOR ANY ERRORS OR OMISSIONS WHICH MAY BE INCORPORATED HEREIN AS A RESULT."

VERIFY SCALES
BAR IS ONE INCH ON ORIGINAL DRAWING.
0" 1"
IF NOT ONE INCH ON THIS DRAWING, ADJUST SCALES ACCORDINGLY.

NO.	DATE	REVISION	BY	CHK.
1	12 / 2015	RECORD DRAWINGS		

DESIGNED BY: RJS
DRAWN BY: CBD
CHECKED BY: RJS
DATE: FEBRUARY 2015

Hatch Mott MacDonald

RSE
RUSS SASAKURA ENGINEERING
LITTLETON, COLORADO

CITY OF LOUISVILLE, COLORADO
HOWARD BERRY
WATER TREATMENT PLANT
SOLIDS HANDLING IMPROVEMENTS

FILTRATE
PUMP STATION PLAN

PROJECT NO. 336016
SHEET NO. E3
DWG. 29 OF 42

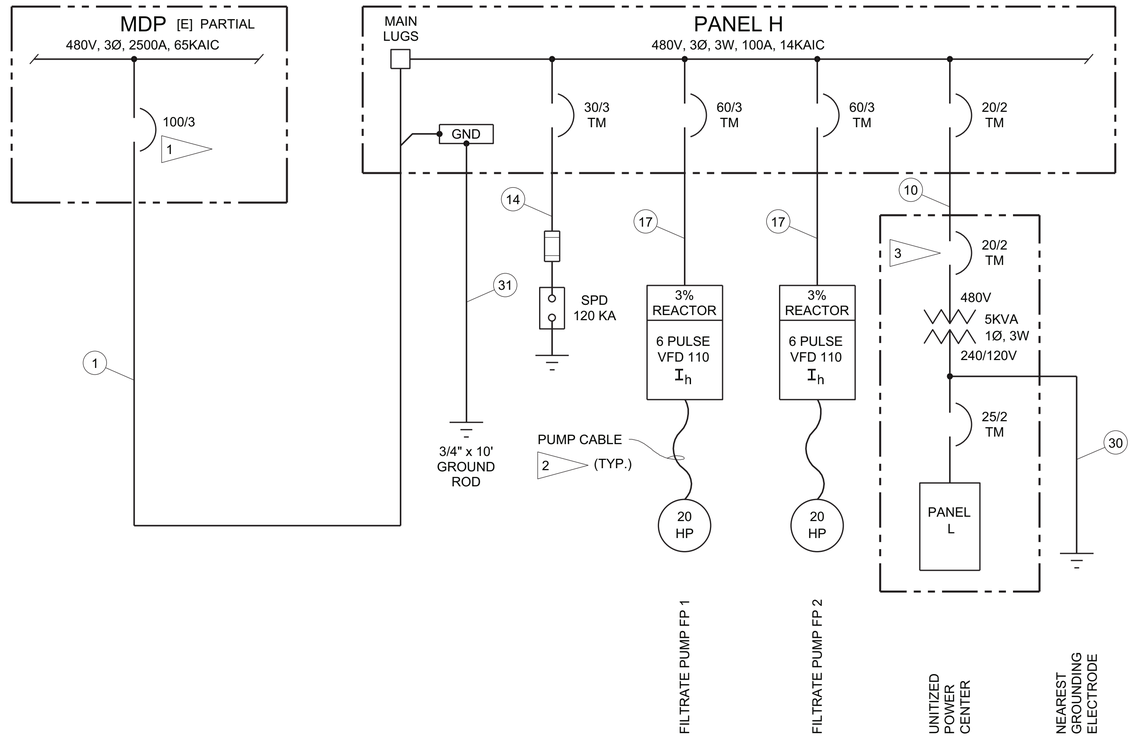

POWER ONE-LINE DIAGRAM

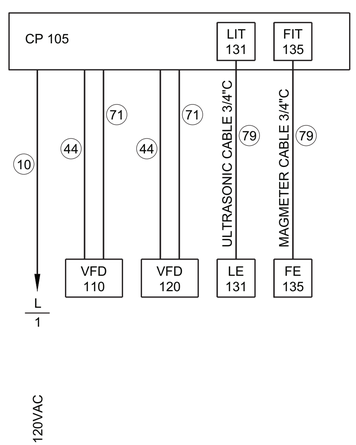

CONTROL ONE-LINE DIAGRAM

FLAG NOTES:

1. SEE FLAG NOTE 1, SHEET E2.
2. SEE PLAN SHEET E3 FOR INSTALLATION DETAILS.
3. UNITIZED POWER CENTER: ENCAPSULATED TRANSFORMER, CIRCUIT BREAKER PANELBOARD, CUTLER HAMMER P48G11S05P, OR APPROVED EQUIVALENT BY SQUARE D OR SIEMENS.

"THESE RECORD DRAWINGS HAVE BEEN PREPARED BASED ON INFORMATION PROVIDED BY OTHERS. THE ENGINEER HAS NOT VERIFIED THE ACCURACY OF THIS INFORMATION AND SHALL NOT BE RESPONSIBLE FOR ANY ERRORS OR OMISSIONS WHICH MAY BE INCORPORATED HEREIN AS A RESULT."

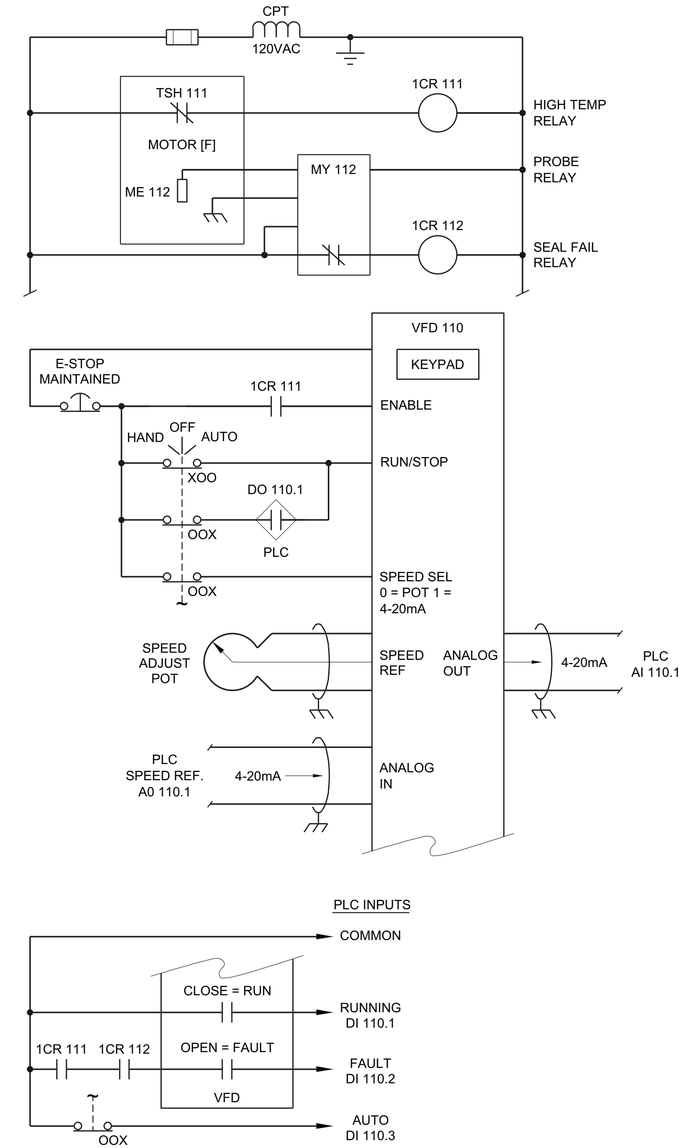

FILTRATE PUMP FP 1 SCHEMATIC

ALL DEVICES AT VFD UNLESS NOTED
FP 2 SIMILAR

VERIFY SCALES	NO.	DATE	REVISION	BY	CHK.
BAR IS ONE INCH ON ORIGINAL DRAWING. 0" 1" IF NOT ONE INCH ON THIS DRAWING, ADJUST SCALES ACCORDINGLY.	1	12 / 2015	RECORD DRAWINGS		

DESIGNED BY: RJS
DRAWN BY: CBD
CHECKED BY: RJS
DATE: FEBRUARY 2015

Hatch Mott MacDonald

RSE
RUSS SASAKURA ENGINEERING
LITTLETON, COLORADO

CITY OF LOUISVILLE, COLORADO
HOWARD BERRY
WATER TREATMENT PLANT
SOLIDS HANDLING IMPROVEMENTS

ONE-LINE DIAGRAMS, SCHEMATIC

PROJECT NO. 336016
SHEET NO. E4
DWG. 30 OF 42

PLC 105 DISCRETE INPUT/OUTPUT MODULE

NO.	POINT TAG	TYPE	DESCRIPTION	FUNCTION
DIGITAL INPUTS 24VDC				
1	DI 110.1	STATUS	PUMP FP 1 VFD	RUNNING
2	DI 110.2	ALARM	PUMP FP 1 VFD	FAULT
3	DI 110.3	STATUS	PUMP FP 1 VFD	AUTO
4	DI 120.1	STATUS	PUMP FP 2 VFD	RUNNING
5	DI 120.2	ALARM	PUMP FP 2 VFD	FAULT
6	DI 120.3	STATUS	PUMP FP 2 VFD	AUTO
7			SPARE	
8			SPARE	
9			SPARE	
10			SPARE	
11			SPARE	
12	DI 135.1	PULSE	FILTRATE RETURN FLOW	TOTALIZE
DIGITAL OUTPUTS 24VDC				
NO.	POINT TAG	TYPE	DESCRIPTION	FUNCTION
1	DO 110.1	CONTROL	PUMP FP 1 VFD	CALL TO RUN
2	DO 120.1	CONTROL	PUMP FP 2 VFD	CALL TO RUN
3			SPARE	
4			SPARE	

PLC 105 ANALOG INPUT/OUTPUT MODULE

NO.	POINT TAG	TYPE	DESCRIPTION	FUNCTION
ANALOG INPUTS				
1	AI 110.1	4-20 MA	PUMP FP 1 VFD	SPEED
2	AI 120.1	4-20 MA	PUMP FP 2 VFD	SPEED
3	AI 131.1	4-20 MA	FILTRATE WETWELL	LEVEL
4	AI 135.1	4-20 MA	FILTRATE RETURN FLOW	RATE
5		4-20 MA	SPARE	
6		4-20 MA	SPARE	
ANALOG OUTPUTS				
NO.	POINT TAG	TYPE	DESCRIPTION	FUNCTION
1	AO 110.1	4-20 MA	PUMP FP 1 VFD	SPEED REF
2	AO 120.1	4-20 MA	PUMP FP 2 VFD	SPEED REF

"THESE RECORD DRAWINGS HAVE BEEN PREPARED BASED ON INFORMATION PROVIDED BY OTHERS. THE ENGINEER HAS NOT VERIFIED THE ACCURACY OF THIS INFORMATION AND SHALL NOT BE RESPONSIBLE FOR ANY ERRORS OR OMISSIONS WHICH MAY BE INCORPORATED HEREIN AS A RESULT."

PLC EQUIPMENT LIST

MARK ⬡	TAG	QTY.	DESCRIPTION	MANUFACTURER
1	CP 105	1	CONTROL PANEL: WALL MOUNT, NEMA 4 PAINTED STEEL ENCLOSURE,FULL REAR MOUNTING PANEL, 3 POINT SINGLE HANDLE LATCHING MECHANISM, SERIALIZED UL 508 LABEL ON ENTIRE FINISHED ASSEMBLY	HOFFMAN CONCEPT SIZE AS REQUIRED
2	PLC 105	1	CPU MODULE: PROGRAMMABLE CONTROLLER PROCESSOR MODULE,32 BIT ARM 9 PROCESSOR, 150MHZ, 16MB FLASH, 2MB BATTERY BACKED SDRAM, 64MB SDRAM, REAL TIME CLOCK, IEC 1133 COMLIANT, -40 TO +70CTEMP RANGE, TWO RS-232, ONE RS485 SERIAL PORTS, MODBUS RTU PROTOCOL, 24 VDC INTEGRAL POWER SUPPLY 4 SLOT RACK	EMERSON CONTROL WAVE MICRO 150 SERIES, NO SUBSTITUTE
3	DI/O	1	MIXED DISCRETE I/O MODULE: 12 INPUTS, 4 OUTPUTS, 24VDC ISOLATED, SINGLE SLOT RACK MOUNT, LOCAL TERMINATIONS, LED INDICATORS PROVIDE INTERPOSING RELAYS ON ALL OUTPUTS INCLUDING SPARES	EMERSON CONTROL WAVE MICRO MIXED DI/O, NO SUBSTITUTE
4	AI/O	1	MIXED ANALOG I/O MODULE: 6 INPUTS, 2 OUTPUTS, 4-20 MA,SINGLE ENDED, EXTERNALLY SOURCED, SINGLE SLOT RACK MOUNT, LOCAL TERMINATIONS, LED INDICATORS	EMERSON CONTROL WAVE MICRO MIXED AI/O, NO SUBSTITUTE
5	MC	2	MEDIA CONVERTER: FIBER OPTIC TO COPPER BI-DIRECTIONAL, RS-485 MODBUS RTU PROTOCOL, 24 VDC POWER, 1300NM MULTIMODE 50/125CABLE COMPATIBLE, SC CONNECTORS, -20 TO +60C TEMP, DIN RAIL MOUNT	PHOENIX CONTACT PSI-MOS-RS485W2/FO 1300E OR EQUIVALENT
6	PP	2	FIBER OPTIC PATCH PANEL: STEEL ENCLOSURE WITH CONNECTOR SHROUD SC CONNECTORS, 6 PORTS	HUBBELL PREMISE WIRING FTU-2SP OR CORNING CABLE SYSTEMS EQUIVALENT
7	FT	LOT	FIBER OPTIC TRUNK CABLE: POLYOLEFIN BASED JACKET MATERIAL, ALL DIELECTRIC CONSTRUCTION, TIGHT BUFFER, GEL FREE WATER BLOCKING TECHNOLOGY, MULTIMODE 1300NM, 50/125 MICRON CORE/CLADDING, 6 STRANDS FIBER, BURIAL IN CONDUIT, 600 # PULLING, EIA/TIA 586A	CORNING CABLE SYSTEMS OR DRAKA
8	FA	2	FIBER OPTIC PATCH CORDS: SIMPLEX OR DUPLEX, SC CONNECTORS, SAME OPTICAL PROPERTIES AS TRUNK CABLE	HUBBELL PREMISE WIRING OR CORNING CABLE SYSTEMS

NOTES:

1. EQUIPMENT LIST SHALL NOT BE CONSIDERED AS A COMPLETE BILL OF MATERIAL, PROVIDE ALL AUXILIARY AND SUPPLEMENTARY ITEMS AS REQUIRED FOR A COMPLETE FUNCTIONAL SYSTEM.

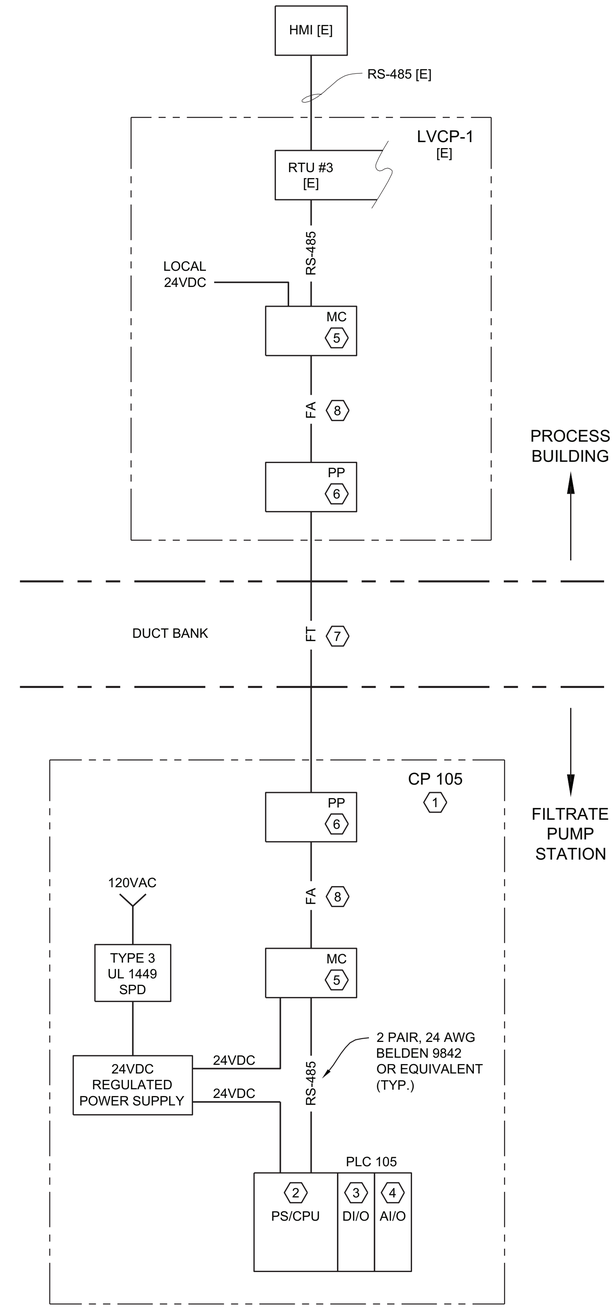

PLC ONE-LINE DIAGRAM

VERIFY SCALES
BAR IS ONE INCH ON ORIGINAL DRAWING.
0" 1"
IF NOT ONE INCH ON THIS DRAWING, ADJUST SCALES ACCORDINGLY.

NO.	DATE	REVISION	BY	CHK.
1	12 / 2015	RECORD DRAWINGS		

DESIGNED BY: RJS
DRAWN BY: CBD
CHECKED BY: RJS
DATE: FEBRUARY 2015

Hatch Mott MacDonald

RSE
RUSS SASAKURA ENGINEERING
LITTLETON, COLORADO

CITY OF LOUISVILLE, COLORADO
HOWARD BERRY
WATER TREATMENT PLANT
SOLIDS HANDLING IMPROVEMENTS

PLC ONE-LINE DIAGRAM, SCHEDULES

PROJECT NO. 336016
SHEET NO. E5
DWG. 31 OF 42

PANEL SCHEDULE
PANEL L

CIRCUIT NUMBER	BREAKER TRIP	LOAD DESCRIPTION	LOAD VA	PHASE	LOAD VA	LOAD DESCRIPTION	BREAKER TRIP	CIRCUIT NUMBER
1	20/1	LIGHTING	96	A	200	CONTROLS	15/1	2
3	15/1	SPARE		B	540	RECEPTACLES	20/1 GFI	4
5	20/1	SPARE		A				6
7				B				8
9				A				10
11				B		SPARE		12

AMPS	100	LOAD	A PHASE CONNECTED VA	296	MAIN	20/2 CIRCUIT BREAKER
VOLTAGE	240/120		B PHASE CONNECTED VA	540	NEUTRAL	
PHASE / WIRE	1 PHASE / 3 WIRE				ENCLOSURE	NEMA 3R
SH. CKT.	10 KAIC		TOTAL CONNECTED VA	836	MOUNTING	SURFACE
TYPE	PLUG ON		DEMAND VA		MFGR.	EATON MINI POWER CENTER

NON-CONTINUOUS LOAD	CONNECTED VA	DEMAND FACTOR	DEMAND VA
MISC	200	1.00	200
LIGHTING	96	1.25	120
RECEPTACLES	540	1.00	540
SUBTOTAL	836		860
MOTOR LOAD			
LARGEST	0	1.25	0
REMAINDER	0	1.00	0
SUBTOTAL	0		0
CONTINUOUS LOAD			
SPACE HEATER	0	1.00	0
SUBTOTAL	0		0
TOTALS VA	836		860
AMPS	3		4

PHASE LOADING	A VA	B VA
	296	540
PHASE BALANCE	A-B	
	55%	

	MIN	ACTUAL
PANEL AMPACITY	4	100
OVERCURRENT DEVICE	4	20

NOTES:

PANEL SCHEDULE
PANEL H

CIRCUIT NUMBER	BREAKER TRIP	LOAD DESCRIPTION	LOAD VA	PHASE	LOAD VA	LOAD DESCRIPTION	BREAKER TRIP	CIRCUIT NUMBER
1	60/3	FILTRATE PUMP FP 1	7162	A	7162	FILTRATE PUMP FP 2	60/3	2
3			7162	B	7162			4
5			7162	C	7162			6
7	30/3	SPD (NOTE 1)		A	296	5 KVA TRANSFORMER	20/2	8
9				B	540			10
11				C		BLANK SPACE		12
13		BUSSED SPACE		A		BUSSED SPACE		14
15				B				16
17				C				18

AMPS	100	LOAD	A PHASE CONNECTED VA	14620	MAIN	LUGS ONLY
VOLTAGE	480		B PHASE CONNECTED VA	14864	NEUTRAL	N/A
PHASE / WIRE	3 PHASE / 3 WIRE		C PHASE CONNECTED VA	14324	ENCLOSURE	NEMA 3R
SH. CKT.	14 KAIC		TOTAL CONNECTED VA	43809	MOUNTING	SURFACE
TYPE	MOLDED CASE		DEMAND VA	49181	MFGR.	EATON PRL 3A

NON-CONTINUOUS LOAD	CONNECTED VA	DEMAND FACTOR	DEMAND VA
TRANSFORMER	836	1.00	836
SUBTOTAL	836		836
MOTOR LOAD			
LARGEST	21487	1.25	26858
REMAINDER	21487	1.00	21487
SUBTOTAL	42973		48345
CONTINUOUS LOAD			
NONE	0	1.00	0
SUBTOTAL	0		0
TOTALS VA	43809		49181
AMPS	53		59

PHASE LOADING	A VA	B VA	C VA
	14620	14864	14324
PHASE BALANCE	A-B	B-C	C-A
	98.4%	96.4%	98.0%

	MIN	ACTUAL
PANEL AMPACITY	59	100
OVERCURRENT DEVICE	59	100
FEEDER AMPACITY	59	150

NOTES:

1. SURGE PROTECTIVE DEVICE: 120 KA SURGE CURRENT, UL 1449 THIRD EDITION, NEMA 4 ENCLOSED SPD120-480D OR EQUIVALENT.

"THESE RECORD DRAWINGS HAVE BEEN PREPARED BASED ON INFORMATION PROVIDED BY OTHERS. THE ENGINEER HAS NOT VERIFIED THE ACCURACY OF THIS INFORMATION AND SHALL NOT BE RESPONSIBLE FOR ANY ERRORS OR OMISSIONS WHICH MAY BE INCORPORATED HEREIN AS A RESULT."

VERIFY SCALES
BAR IS ONE INCH ON ORIGINAL DRAWING.
0" 1"
IF NOT ONE INCH ON THIS DRAWING, ADJUST SCALES ACCORDINGLY.

NO.	DATE	REVISION	BY	CHK.
1	12 / 2015	RECORD DRAWINGS		

DESIGNED BY: RJS
DRAWN BY: CBD
CHECKED BY: RJS
DATE: FEBRUARY 2015

Hatch Mott MacDonald

RSE
RUSS SASAKURA ENGINEERING
LITTLETON, COLORADO

CITY OF LOUISVILLE, COLORADO
HOWARD BERRY
WATER TREATMENT PLANT
SOLIDS HANDLING IMPROVEMENTS

SCHEDULES

PROJECT NO. 336016
SHEET NO. E6
DWG. 32 OF 42

CABLE/CONDUIT SCHEDULE

MARK ◯	PARALLEL RUNS	PHASE	NEUTRAL	GROUND	CONTROL	TRADE SIZE CONDUIT
1	1	3-NO. 1/0		1-NO. 4		3"
2						
3						

MARK	CONDUCTORS	GROUND	CONDUIT	MARK	CONDUCTORS	GROUND	CONDUIT
10	2-NO. 12	1-NO. 12	3/4"	40	2-NO. 14	1-NO. 14	3/4"
11	3-NO. 12	1-NO. 12	3/4"	41	3-NO. 14	1-NO. 14	3/4"
12	4-NO. 12	1-NO. 12	3/4"	42	4-NO. 14	1-NO. 14	3/4"
13	2-NO. 10	1-NO. 10	3/4"	43	6-NO. 14	1-NO. 14	3/4"
14	3-NO. 10	1-NO. 10	3/4"	44	8-NO. 14	1-NO. 14	3/4"
15	4-NO. 10	1-NO. 10	3/4"	45	10-NO. 14	1-NO. 14	3/4"
16	2-NO. 8	1-NO. 10	3/4"	46	12-NO. 14	1-NO. 14	1"
17	3-NO. 8	1-NO. 10	3/4"	47	16-NO. 14	1-NO. 14	1"
18	4-NO. 8	1-NO. 10	1"	48	20-NO. 14	1-NO. 14	1 1/2"
19	2-NO. 6	1-NO. 8	1"	49	24-NO. 14	1-NO. 14	1 1/2"
20	3-NO. 6	1-NO. 8	1"	50	30-NO. 14	1-NO. 14	2"
21	4-NO. 6	1-NO. 8	1 1/4"	51	36-NO. 14	1-NO. 14	2"
22	3-NO. 4	1-NO. 6	1 1/4"	52	40-NO. 14	1-NO. 14	2"
23	4-NO. 4	1-NO. 6	1 1/4"	53	48-NO. 14	1-NO. 14	2"
24	3-NO. 2	1-NO. 6	1 1/2"	54	60-NO. 14	1-NO. 14	2"
25	4-NO. 2	1-NO. 6	1 1/2"	55			
26	3-NO. 1/0	1-NO. 6	2"	56			
27	6-NO. 12	1-NO. 12	3/4"	57			
28				58			
29				59			
30		1-NO. 8	3/4"	70	1-2C #18TS		3/4"
31		1-NO. 6	3/4"	71	2-2C #18TS		3/4"
32		1-NO. 4	3/4"	72	3-2C #18TS		3/4"
33		1-NO. 2	3/4"	73	4-2C #18TS		3/4"
34		1-NO. 1/0	1"	74	5-2C #18TS		1"
35		1-NO. 2/0	1"	75	6-2C #18TS		1 1/4"
36		1-NO. 3/0	1 1/4"	76	7-2C #18TS		1 1/2"
				77	12-2C #18TS		2"
				78	16-2C #18TS		2"
				79	MANUF CABLE		3/4"

CABLE/CONDUIT SCHEDULE NOTES:

1. (42)(14) DENOTES COMMON CONDUIT (INCREASE CONDUIT SIZE IF REQUIRED) USE SINGLE LARGEST GROUNDING CONDUCTOR.

2. CONDUIT SIZES MAY VARY IN DUCT BANKS.

"THESE RECORD DRAWINGS HAVE BEEN PREPARED BASED ON INFORMATION PROVIDED BY OTHERS. THE ENGINEER HAS NOT VERIFIED THE ACCURACY OF THIS INFORMATION AND SHALL NOT BE RESPONSIBLE FOR ANY ERRORS OR OMISSIONS WHICH MAY BE INCORPORATED HEREIN AS A RESULT."

VERIFY SCALES

BAR IS ONE INCH ON ORIGINAL DRAWING.
0" 1"
IF NOT ONE INCH ON THIS DRAWING, ADJUST SCALES ACCORDINGLY.

NO.	DATE	REVISION	BY	CHK.
1	12 / 2015	RECORD DRAWINGS		

DESIGNED BY: RJS
DRAWN BY: CBD
CHECKED BY: RJS
DATE: FEBRUARY 2015

Hatch Mott MacDonald

RSE
RUSS SASAKURA ENGINEERING
LITTLETON, COLORADO

CITY OF LOUISVILLE, COLORADO
HOWARD BERRY
WATER TREATMENT PLANT
SOLIDS HANDLING IMPROVEMENTS

SCHEDULES

PROJECT NO. 336016
SHEET NO. E7
DWG. 33 OF 42

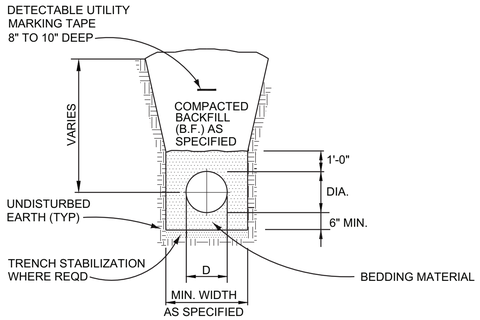

NOTE:
TRENCH SHALL CONFORM TO
OSHA STANDARDS

PIPE TRENCH
NTS

2220

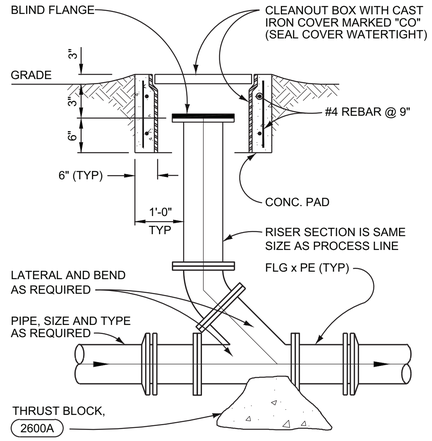

GRADE CLEANOUT (GCO)
NTS

2620

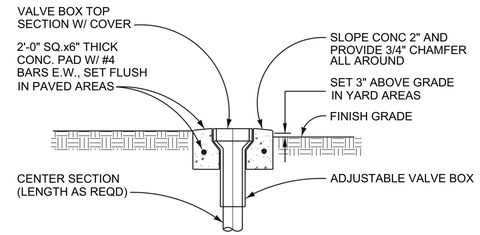

VALVE BOX PAD

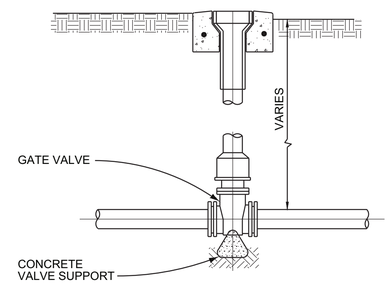

VALVE BOX

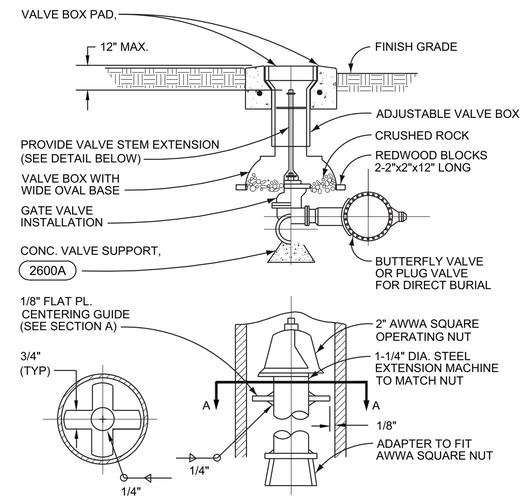

SECTION A

BURIED VALVE INSTALLATION

NOTE:
TO EXTERIOR SURFACES OF VALVE
BODY, VALVE BOX, EXTENSION
STEM AND PROVIDE PROTECTIVE
COATING APPURTENANCES.

BURIED VALVE-TYPE A
NTS

* PROVIDE LOCKING LID WITH PENTAGON
NUT AT 12" SA GATE VALVE.

2635

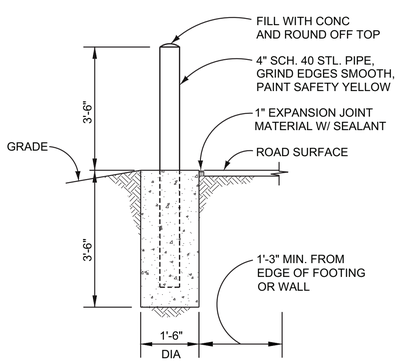

EXTERIOR

BOLLARD
NTS

2640

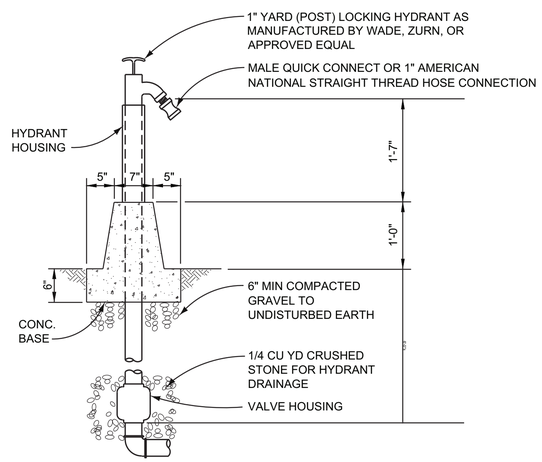

NON-FREEZE POST HYDRANT
NTS

2651

"THESE RECORD DRAWINGS HAVE BEEN PREPARED BASED ON INFORMATION PROVIDED BY OTHERS. THE ENGINEER HAS NOT VERIFIED THE ACCURACY OF THIS INFORMATION AND SHALL NOT BE RESPONSIBLE FOR ANY ERRORS OR OMISSIONS WHICH MAY BE INCORPORATED HEREIN AS A RESULT."

VERIFY SCALES
BAR IS ONE INCH ON ORIGINAL DRAWING.
0" 1"
IF NOT ONE INCH ON THIS DRAWING, ADJUST SCALES ACCORDINGLY.

NO.	DATE	REVISION	BY	CHK.
1	12 / 2015	RECORD DRAWINGS		

DESIGNED BY: RJA
DRAWN BY: JFA
CHECKED BY: RJA
DATE: FEBRUARY 2015

Hatch Mott MacDonald

CITY OF LOUISVILLE, COLORADO
HOWARD BERRY
WATER TREATMENT PLANT
SOLIDS HANDLING IMPROVEMENTS

CIVIL DETAILS

PROJECT NO. 336016
SHEET NO. D1
DWG. 34 OF 42

2/24/15 16:04 ARC56862 R19 P:\336016 - LOUISVILLE SOUTH WTP SOLIDS HANDLING\9-DETAILS\DX.DWG XREFS: P:\336016 - LOUISVILLE SOUTH WTP SOLIDS HANDLING\1-XREF\X-TITLE.DWG;

TABLE 1 - BEARING AREA OF THRUST BLOCKS IN SQUARE FEET
(HORIZONTAL BENDS & VERTICAL UPWARD BENDS)

FITTING SIZE (IN)	A_1 TEE, WYE PLUG OR CAP (SF)	A_2 90° BEND (SF)	A_2 45° BEND (SF)	A_2 22 1/2° BEND (SF)	A_2 11 1/4° BEND (SF)
4	1.4	2.0	1.1	1.0	1.0
6	3.2	4.5	2.4	1.2	1.0
8	5.7	8.0	4.3	2.2	1.1
10	8.8	12.5	6.8	3.4	1.7
12	12.7	18.0	9.7	5.0	2.5
14	17.3	24.5	13.3	6.8	3.4
16	22.6	32.0	17.3	8.8	4.4
18	28.6	40.5	21.9	11.2	5.6
20	35.3	50.0	27.1	13.8	6.9
24	50.9	72.0	39.0	19.9	10.0

TABLE 2 - VOLUME OF THRUST BLOCK IN CUBIC YARDS
(VERTICAL DOWNWARD BENDS)

FITTING SIZE (IN)	V_1 45° BEND (CY)	V_1 22 1/2° BEND (CY)	V_1 11 1/4° BEND (CY)	ROD SIZE	EMBEDMENT (FT)
4	0.5	0.3	0.1	#6	2.5
6	1.1	0.6	0.3	#6	2.5
8	2.0	1.1	0.5	#6	2.5
10	3.1	1.7	0.9	#6	2.5
12	4.4	2.4	1.2	#6	2.5
14	6.1	3.3	1.7	#8	3.0
16	7.9	4.3	2.2	#8	3.0
18	10.0	5.4	2.8	#8	3.0
20	12.3	6.7	3.4	#8	3.0
24	17.8	9.6	4.9	#8	3.0

HORIZONTAL BENDS AND VERTICAL UPWARD BENDS:

1. BEARING AREAS (TABLE 1) BASED ON TEST PRESSURE OF 150 psi, AN ALLOWABLE SOIL BEARING PRESSURE OF 2,000 psf AND A SAFETY FACTOR OF 1.5, TO COMPUTE BEARING AREAS FOR DIFFERENT TEST PRESSURES AND SOIL BEARING PRESSURES, USE THE FOLLOWING EQUATION:

BEARING AREA = (TEST PRESSURE / 150 psi) x (2,000 / SOIL BEARING PRESSURE psf) x (TABLE 1 VALUE)

2. UNLESS OTHERWISE NOTED ON THE GENERAL DRAWINGS IN THE GENERAL NOTES OR SPECIFICATIONS, USE SOIL BEARING PRESSURE = 2000 psf FOR THIS PROJECT.
3. BEARING AREA OF THRUST BLOCK SHALL NOT BE LESS THAN 1.0 SQUARE FOOT.
4. IF THE DEPTH REQUIREMENT (SEE TYPICAL CROSS SECTION) CAN NOT BE ACHIEVED, THE ENGINEER SHALL BE NOTIFIED.

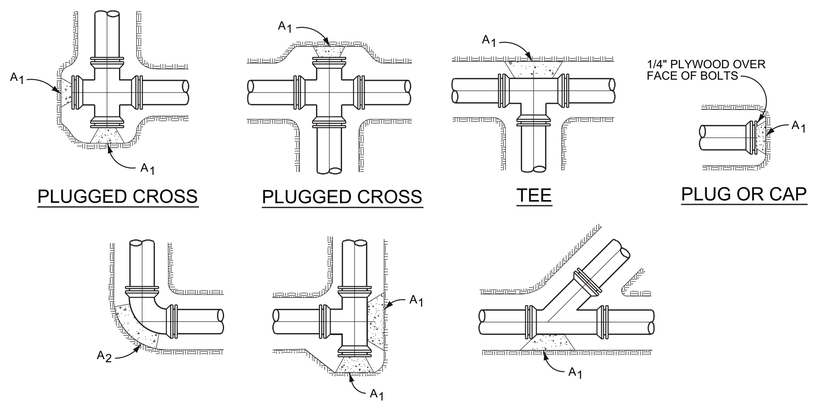

THRUST RESTRAINTS-TYPE A
NTS

GENERAL:

1. FOR ALL BURIED PIPING EXCEPT FLANGED, SCREWED, SOCKET WELD PVC, OR WELDED STEEL PIPE SPECIFIED TO BE PRESSURE TESTED, ALL FITTINGS SHALL BE PROVIDED WITH CONCRETE THRUST BLOCKS AT ALL DIRECTION CHANGES UNLESS OTHERWISE NOTED.
2. IN ADDITION TO THRUST BLOCKS, ALL FITTINGS AND VALVES SHALL BE RESTRAINED FOR AT LEAST 40 FEET IN ALL DIRECTIONS. MEGALUGS MAY BE USED ON DIP AND PVC PIPE FOR RESTRAINT EXCEPT IN LOCATIONS WHERE FLEXIBLE JOINTS ARE REQUIRED.
3. CONCRETE THRUST BLOCKING TO BE POURED AGAINST UNDISTURBED EARTH OR STRUCTURAL BACKFILL.
4. KEEP CONCRETE CLEAR OF JOINT, BOLTS, NUTS, CLAMPS, AND OTHER ACCESSORIES.
5. THRUST BLOCKS SHALL NOT BE LOCATED OR SIZED TO ENCASE ADJACENT PIPES OR FITTINGS.
6. A BOND BREAKER SHALL BE PLACED BETWEEN THE PIPE AND THRUST BLOCK.

VERTICAL DOWNWARD BENDS:

1. VERTICAL BENDS THAT REQUIRE A THRUST BLOCK VOLUME EXCEEDING 5 CUBIC YARDS REQUIRE SPECIAL BLOCKING DETAILS. SEE DRAWINGS FOR VOLUMES SHOWN TO LEFT OF HEAVY, BOLD LINE IN TABLE 2.
2. THRUST BLOCK VOLUMES (TABLE 2) FOR VERTICAL DOWNWARD BENDS HAVING UPWARD RESULTANT THRUSTS ARE BASED ON TEST PRESSURE OF 150 PSI, THE WEIGHT OF CONCRETE = 4050 LBS/CUBIC YARD, AND A SAFETY FACTOR OF 1.5. TO COMPUTE VOLUMES FOR DIFFERENT TEST PRESSURES AND CONCRETE WEIGHTS, USE THE FOLLOWING EQUATION:

VOLUME = (TEST PRESSURE / 150) x (4,050 / CONCRETE WEIGHT) x (TABLE 2 VALUE)

3. VOLUME OF THRUST BLOCK IN CUBIC YARDS FOR VALVES SHALL BE THE SAME VOLUME USED FOR 11 1/4 BENDS.

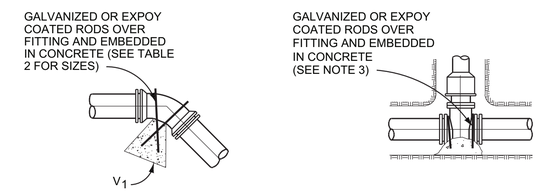

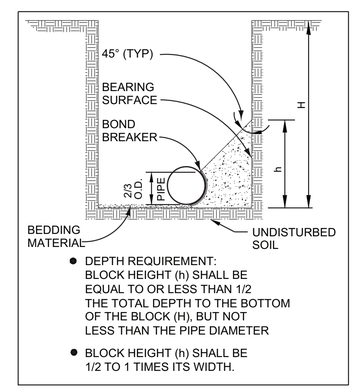

TYPICAL CROSS SECTION

"THESE RECORD DRAWINGS HAVE BEEN PREPARED BASED ON INFORMATION PROVIDED BY OTHERS. THE ENGINEER HAS NOT VERIFIED THE ACCURACY OF THIS INFORMATION AND SHALL NOT BE RESPONSIBLE FOR ANY ERRORS OR OMISSIONS WHICH MAY BE INCORPORATED HEREIN AS A RESULT."

2600

2/24/15 16:04 ARC56862 R19 P:\336016 - LOUISVILLE SOUTH WTP SOLIDS HANDLING\8-DETAILS\DX.DWG XREFS: P:\336016 - LOUISVILLE SOUTH WTP SOLIDS HANDLING\1-XREFIX-TITLE.DWG;

VERIFY SCALES
BAR IS ONE INCH ON ORIGINAL DRAWING.
0" 1"
IF NOT ONE INCH ON THIS DRAWING, ADJUST SCALES ACCORDINGLY.

NO.	DATE	REVISION	BY	CHK.
1	12 / 2015	RECORD DRAWINGS		

DESIGNED BY: RJA
DRAWN BY: JFA
CHECKED BY: RJA
DATE: FEBRUARY 2015

Hatch Mott MacDonald

CITY OF LOUISVILLE, COLORADO
HOWARD BERRY
WATER TREATMENT PLANT
SOLIDS HANDLING IMPROVEMENTS

CIVIL DETAILS

PROJECT NO. 336016
SHEET NO. D2
DWG. 35 OF 42

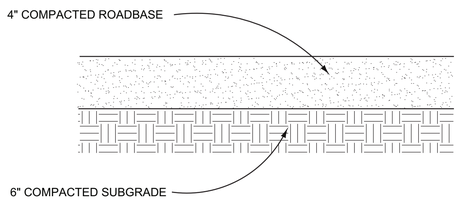

WALKING PATH SURFACE

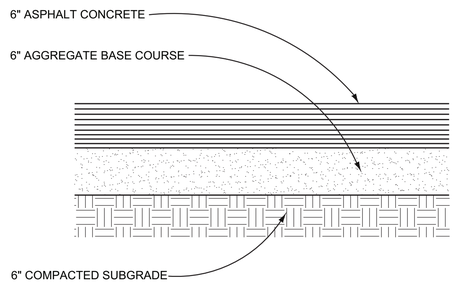

PAVED ROAD

ROAD & WALKING PATH SURFACES (A / D3)
NTS

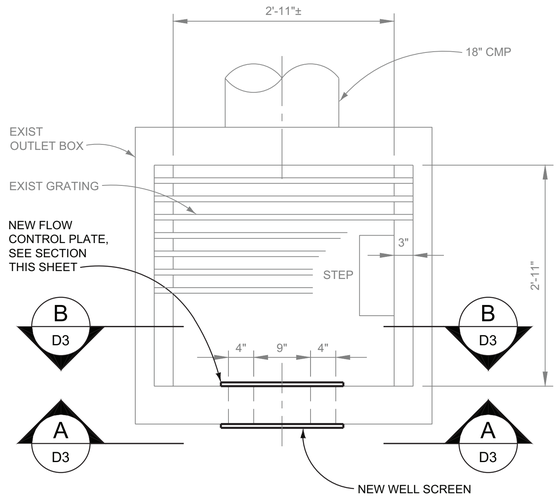

PLAN

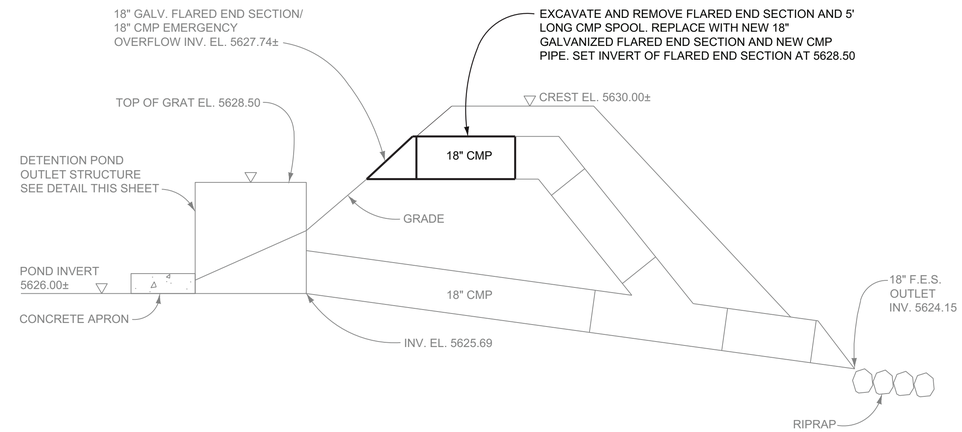

DETENTION POND EMERGENCY OVERFLOW IMPROVEMENTS (B / D3)
NTS

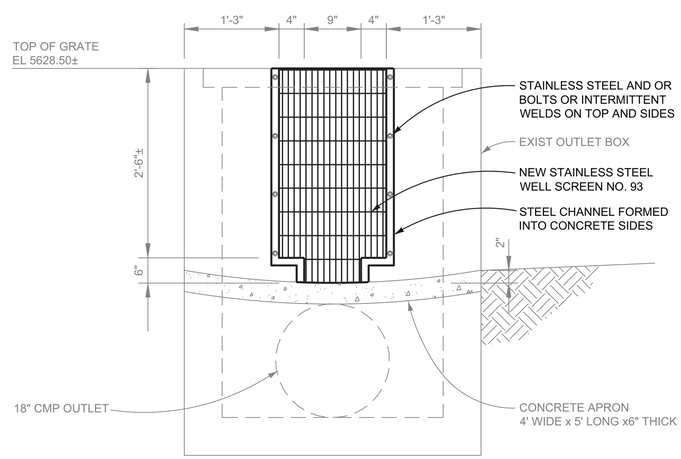

SECTION (A / D3)

5628.50 100 YEAR FLOOD LEVEL

5628.00 10 YEAR FLOOD LEVEL

NOTE:

FIELD VERIFY DIMENSIONS OF SCREEN AND
FLOW CONTROL PLATE BEFORE FABRICATION.

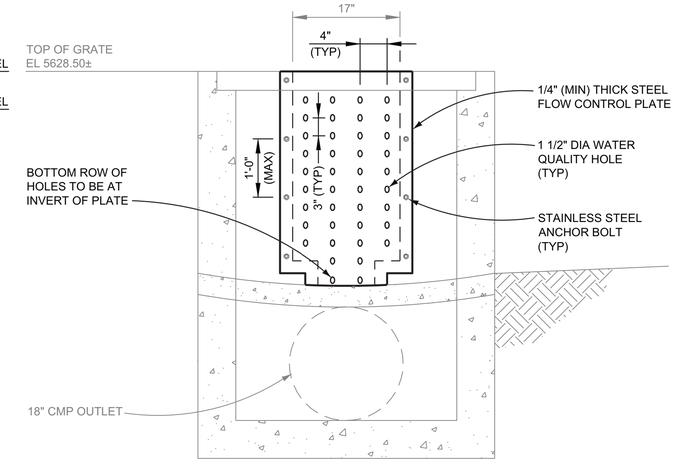

SECTION (B / D3)

DETENTION POND OUTLET IMPROVEMENTS (C / D3)
NTS

"THESE RECORD DRAWINGS HAVE BEEN PREPARED BASED ON INFORMATION PROVIDED BY OTHERS. THE ENGINEER HAS NOT VERIFIED THE ACCURACY OF THIS INFORMATION AND SHALL NOT BE RESPONSIBLE FOR ANY ERRORS OR OMISSIONS WHICH MAY BE INCORPORATED HEREIN AS A RESULT."

VERIFY SCALES
BAR IS ONE INCH ON ORIGINAL DRAWING.
0" 1"
IF NOT ONE INCH ON THIS DRAWING, ADJUST SCALES ACCORDINGLY.

NO.	DATE	REVISION	BY	CHK.
1	12 / 2015	RECORD DRAWINGS		

DESIGNED BY: RJA
DRAWN BY: JFA
CHECKED BY: RJA
DATE: FEBRUARY 2015

Hatch Mott MacDonald

CITY OF LOUISVILLE, COLORADO
HOWARD BERRY
WATER TREATMENT PLANT
SOLIDS HANDLING IMPROVEMENTS

CIVIL DETAILS

PROJECT NO. 336016
SHEET NO. D3
DWG. 36 OF 42

2/24/15 16:54 ARC56862 R19 P:\336016 - LOUISVILLE SOUTH WTP SOLIDS HANDLING\6-DETAILS\D3 CIVIL DWG XREFS: P:\336016 - LOUISVILLE SOUTH WTP SOLIDS HANDLING\1-XREF\X-TITLE.DWG;

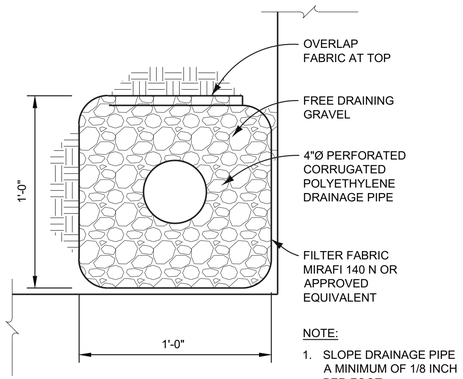

NOTE:
1. SLOPE DRAINAGE PIPE A MINIMUM OF 1/8 INCH PER FOOT.
2. EXTEND PIPE TO DAYLIGHT.

UNDERDRAIN DETAIL
NTS

2410

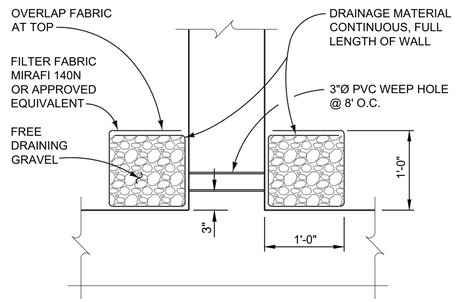

DRAIN / WEEP HOLE DETAIL
NTS

2411

EXCEPT AS OTHERWISE NOTED OR SHOWN ON THE DRAWINGS REINFORCEMENT SHALL HAVE A MINIMUM CONCRETE COVER AS FOLLOWS:	
BOTTOM OF FOUNDATIONS AND FOOTINGS OR OTHER CONC CAST AGAINST EARTH:	3"
ALL OTHER WALLS, BEAMS, SLABS AND COLUMNS:	2"

REINFORCEMENT CONCRETE COVER
NTS

3003

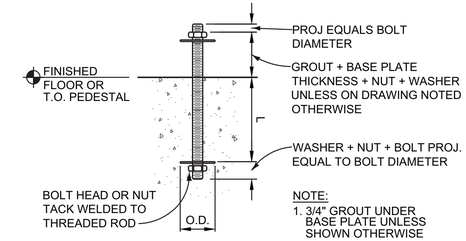

NOTE:
1. 3/4" GROUT UNDER BASE PLATE UNLESS SHOWN OTHERWISE ON DRAWING.

BOLT (DIA)	L (MIN)	L (MIN) IN COLUMNS, PIERS, PEDESTALS, OR PILASTERS	WASHER	
			O.D. (MIN)	THICKNESS (MIN)
1/2"	4"	7"	1 1/16"	0.095"
5/8"	4 1/2"	8 1/2"	1 5/16"	0.095"
3/4"	5"	9"	1 1/2"	0.134"
7/8"	6"	10 1/2"	1 3/4"	0.134"
1"	7"	12"	2"	0.134"
1 1/8"	8"	13 1/2"	2 1/4"	0.134"
1 1/4"	9"	15"	2 1/2"	0.165"

ANCHOR BOLTS
NTS

3005

HILTI HIT HY-200 ADHESIVE WITH HAS THREADED ROD OR EQUIVALENT SPACING AND EMBEDMENT REQUIREMENTS U.N.O.				
BOLT DIA d	HOLE DIA BD	H (MIN)	AS (MIN)	ED (MIN)
3/8"	7/16"	3 3/8"	3"	3 3/4"
1/2"	9/16"	4 1/2"	4"	5"
5/8"	3/4"	5 5/8"	5"	6 1/4"
3/4"	7/8"	6 3/4"	6"	7 1/2"
7/8"	1"	7 7/8"	7"	9"
1"	1 1/8"	9"	8"	10"

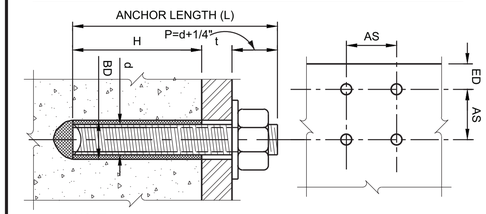

NOTE:
1. DO NOT USE ADHESIVE ANCHORS TO SUPPORT FIRE RESISTIVE CONSTRUCTION OR WHERE AMBIENT TEMPERATURES WILL EXCEED 120 DEGREES FARENHEIT.

ADHESIVE ANCHOR
NTS

3006

"THESE RECORD DRAWINGS HAVE BEEN PREPARED BASED ON INFORMATION PROVIDED BY OTHERS. THE ENGINEER HAS NOT VERIFIED THE ACCURACY OF THIS INFORMATION AND SHALL NOT BE RESPONSIBLE FOR ANY ERRORS OR OMISSIONS WHICH MAY BE INCORPORATED HEREIN AS A RESULT."

HILTI KWIK BOLT III EXPANSION ANCHOR OR EQUIVALENT SPACING AND EMBEDMENT REQUIREMENTS U.N.O.				
BOLT DIA d	HOLE DIA BD	H (MIN)	AS (MIN)	ED (MIN)
3/8"	3/8"	2 3/8"	3"	3 3/4"
1/2"	1/2"	3 5/8"	4 1/2"	5"
5/8"	5/8"	4 3/8"	5"	6"
3/4"	3/4"	5 5/8"	7"	7"
1"	1"	6 3/8"	7"	7"

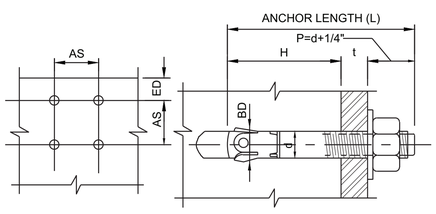

EXPANSION ANCHOR
NTS

3007

2" Cover 6" or Greater Spacing			f'c=4,000 psi fy=60,000 psi	
BAR SIZE	90° HOOK		STRAIGHT	
	ldh	A	TOP SPLICE	OTHER SPLICE
4	7	8	19	15
5	9	10	24	19
6	10	12	29	22
7	12	14	42	32
8	13	16	48	37
9	15	19	60	46
10	17	20	74	57
11	19	24	88	68
	LENGTHS IN INCHES			

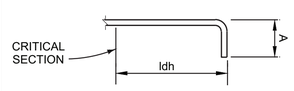

NOTES:
1. TOP BARS ARE HORIZ. BARS PLACED SUCH THAT MORE THAN 12" OF CONC. IS CAST BELOW THE BAR. HORIZONTAL WALL BARS ARE TOP BARS.
2. FOR EPOXY COATED REINFORCING BARS, INCREASE STRAIGHT SPLICE LENGTH BY 50%.
3. 90° HOOKS SHALL BE LOCATED WITHIN THE CONFINED CORE OF A COLUMN OR BOUNDARY ELEMENT.

REINFORCING SPLICE LENGTHS
NTS

3009

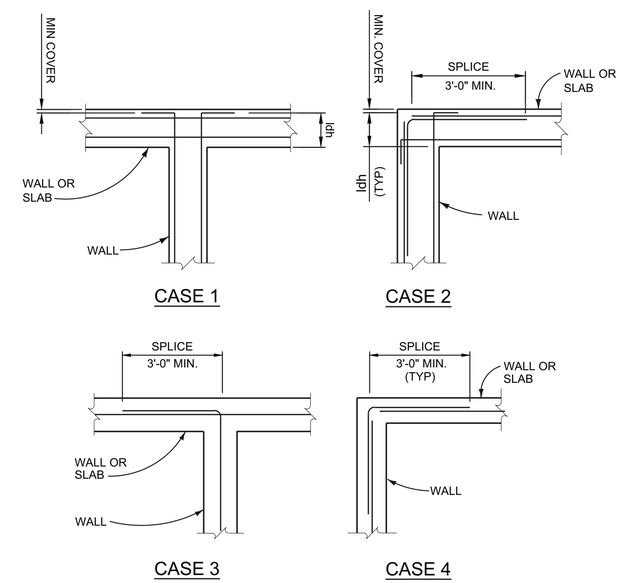

NOTE:
FOR SPLICE & ldh, SEE TABLE ON DET 3009

CORNER BARS
NTS

3203

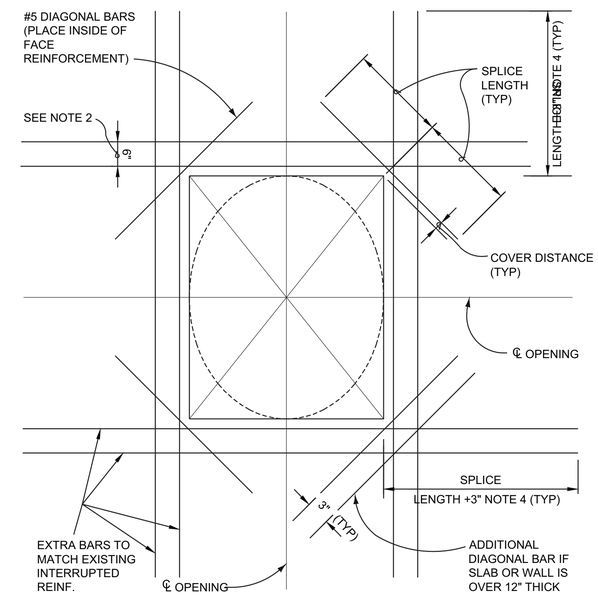

NOTES:
1. THIS STANDARD IS LIMITED TO OPENINGS LARGE ENOUGH TO INTERRUPT REINFORCING, BUT NOT LARGER THAN 6'-0" EACH WAY. OTHERWISE SEE DRAWINGS.
2. PLACE EXTRA BARS CLOSE TO EACH SIDE OF OPENING EQUAL TO HALF OF THE INTERRUPTED BARS EACH SIDE. USE 6" SPACING OR SPACING OF INTERRUPTED BARS, WHICHEVER IS LESS.
3. IN ADDITION, AT CIRCULAR OPENINGS PROVIDE 2-#5 x ◯
4. IF LENGTH SHOWN CANNOT BE INSTALLED DUE TO WALL OR SLAB INTERRUPTION, PROVIDE DOWELS OR CORNER BARS.

REINFORCEMENT ARRANGEMENT AROUND OPENINGS
NTS

3211

VERIFY SCALES
BAR IS ONE INCH ON ORIGINAL DRAWING.
0" 1"
IF NOT ONE INCH ON THIS DRAWING, ADJUST SCALES ACCORDINGLY.

NO.	DATE	REVISION	BY	CHK.
1	12 / 2015	RECORD DRAWINGS		

DESIGNED BY: JMR
DRAWN BY: JFA
CHECKED BY: RJA
DATE: FEBRUARY 2015

Hatch Mott MacDonald

CITY OF LOUISVILLE, COLORADO
HOWARD BERRY
WATER TREATMENT PLANT
SOLIDS HANDLING IMPROVEMENTS

STRUCTURAL
STANDARD DETAILS

PROJECT NO. 336016
SHEET NO. D4
DWG. 37 OF 42

2/24/15 16:04 ARC56862 R19 P:\336016 - LOUISVILLE SOUTH WTP SOLIDS HANDLING\8-DETAILS\DX.DWG XREFS: P:\336016 - LOUISVILLE SOUTH WTP SOLIDS HANDLING\1-XREFX-TITLE.DWG

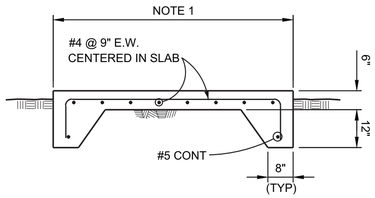

NOTES:

1. COORDINATE W/ARCH, CIVIL, OR MECH & EQUIPMENT SUPPLIER FOR OVERALL DIMENSIONS.
2. WHERE PAD IS CAST AGAINST BUILDING OR ANY SITE CONCRETE, PROVIDE 1/2" EXPANSION JOINT.

APRON/SITE EQUIPMENT PAD DETAIL

NTS

3213

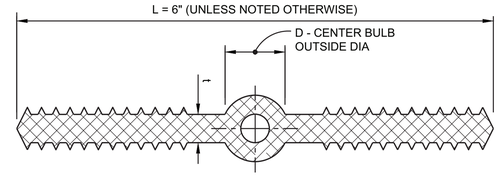

NOTE:

1. BULB TYPE WATERSTOP SHOWN IS REQUIRED FOR EXPANSION AND CONTROL JOINTS. SIMILAR WATERSTOP WITHOUT CENTERBULB MAY BE USED AT CONSTRUCTION JOINTS.

L	t	D
6"	3/8	7/8
4"	3/16	3/4

WATERSTOP

NTS

3221

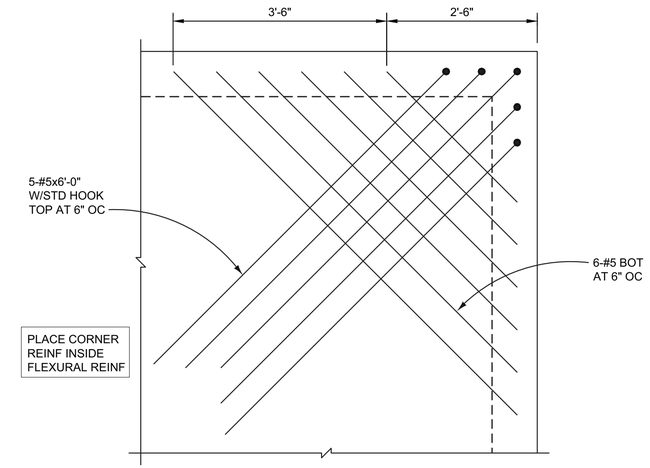

STRUCTURAL SLAB CORNER REINFORCING

NTS

3227

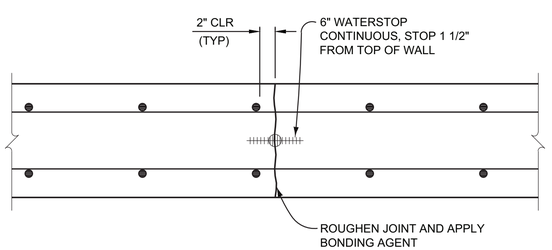

NOTES:

1. ALL REINFORCING CONTINUOUS ACROSS JOINT.
2. CENTER WATERSTOP IN WALLS OR SLABS.
3. VIBRATE CONCRETE THOUROUGHLY ON BOTH SIDES OF WATERSTOP TO AVOID VOIDS.

CONSTRUCTION JOINT FOR WATER CONTAINING STRUCTURES

NTS

3228

"THESE RECORD DRAWINGS HAVE BEEN PREPARED BASED ON INFORMATION PROVIDED BY OTHERS. THE ENGINEER HAS NOT VERIFIED THE ACCURACY OF THIS INFORMATION AND SHALL NOT BE RESPONSIBLE FOR ANY ERRORS OR OMISSIONS WHICH MAY BE INCORPORATED HEREIN AS A RESULT."

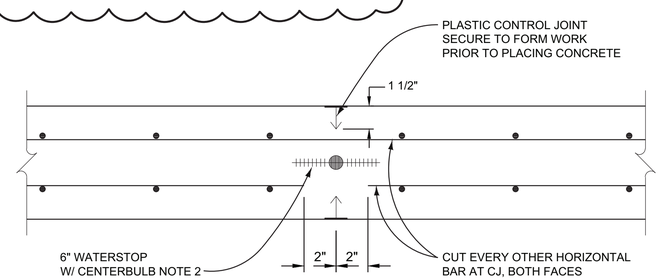

NOTES:

1. LOCATE CONTROL JOINTS AT 12'-0" MAX.
2. EXTEND WATERSTOP FROM TOP OF FOOTING TO 2" BELOW TOP OF WALL.

DRYING BED WALL CONTROL JOINT

NTS

3232

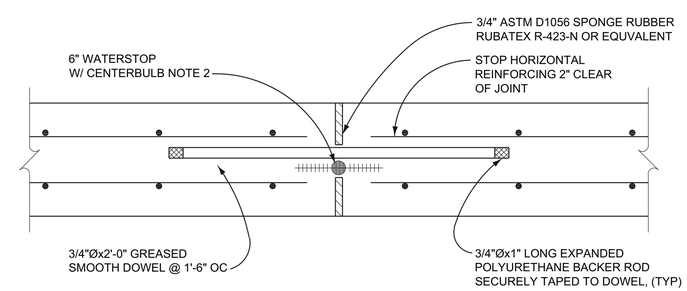

NOTES:

1. LOCATE EXPANSION JOINTS AT 60'-0" MAX.
2. EXTEND WATERSTOP FROM TOP OF FOOTING TO 2" BELOW TOP OF WALL.

DRYING BED WALL EXPANSION JOINT

NTS

3233

VERIFY SCALES

BAR IS ONE INCH ON ORIGINAL DRAWING.

0" 1"

IF NOT ONE INCH ON THIS DRAWING, ADJUST SCALES ACCORDINGLY.

NO.	DATE	REVISION	BY	CHK.
1	12 / 2015	RECORD DRAWINGS		

DESIGNED BY: JMR
DRAWN BY: JFA
CHECKED BY: RJA
DATE: FEBRUARY 2015

Hatch Mott MacDonald

CITY OF LOUISVILLE, COLORADO
HOWARD BERRY
WATER TREATMENT PLANT
SOLIDS HANDLING IMPROVEMENTS

STRUCTURAL
STANDARD DETAILS

PROJECT NO. 336016
SHEET NO. D5
DWG. 38 OF 42

2/24/15 16:04 ARC56862, R19 P:\336016 - LOUISVILLE SOUTH WTP SOLIDS HANDLING\8-DETAILS\DX,DWG XREFS: P:\336016 - LOUISVILLE SOUTH WTP SOLIDS HANDLING\1-XREF\X-TITLE.DWG;

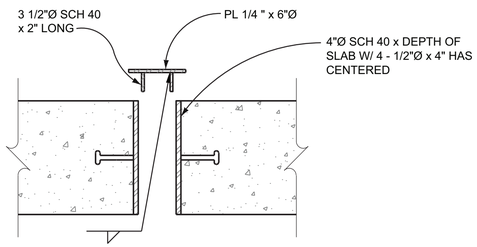

NOTE:

1. HOT-DIP GALVANIZE AFTER FABRICATION.

VALVE ACCESS AND COVER

NTS

5009

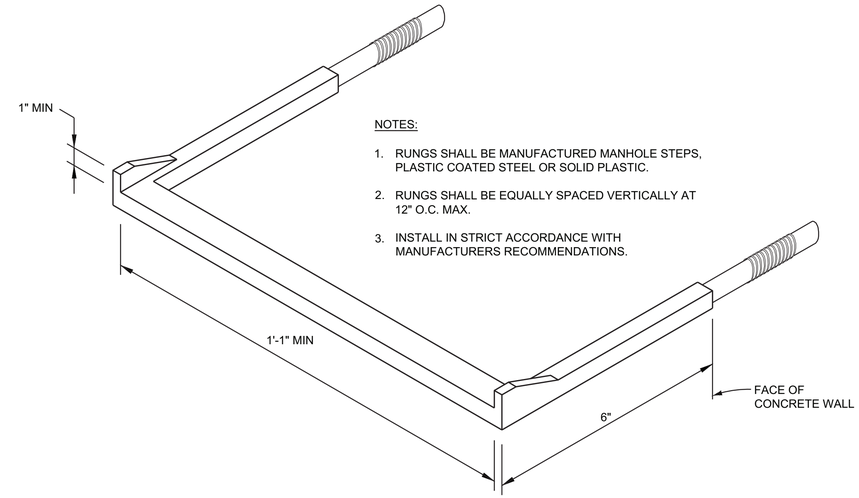

NOTES:

1. RUNGS SHALL BE MANUFACTURED MANHOLE STEPS, PLASTIC COATED STEEL OR SOLID PLASTIC.
2. RUNGS SHALL BE EQUALLY SPACED VERTICALLY AT 12" O.C. MAX.
3. INSTALL IN STRICT ACCORDANCE WITH MANUFACTURERS RECOMMENDATIONS.

DRIVEN IN LADDER RUNGS

NTS

5016

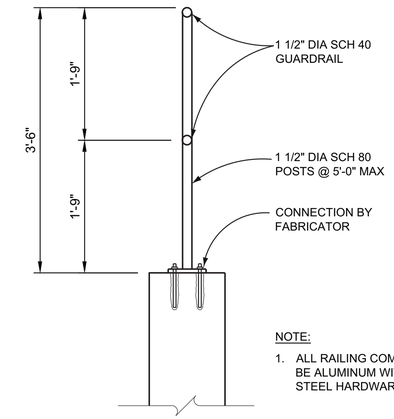

NOTE:

1. ALL RAILING COMPONENTS TO BE ALUMINUM WITH STAINLESS STEEL HARDWARE.

GUARDRAIL

NTS

5750

"THESE RECORD DRAWINGS HAVE BEEN PREPARED BASED ON INFORMATION PROVIDED BY OTHERS. THE ENGINEER HAS NOT VERIFIED THE ACCURACY OF THIS INFORMATION AND SHALL NOT BE RESPONSIBLE FOR ANY ERRORS OR OMISSIONS WHICH MAY BE INCORPORATED HEREIN AS A RESULT."

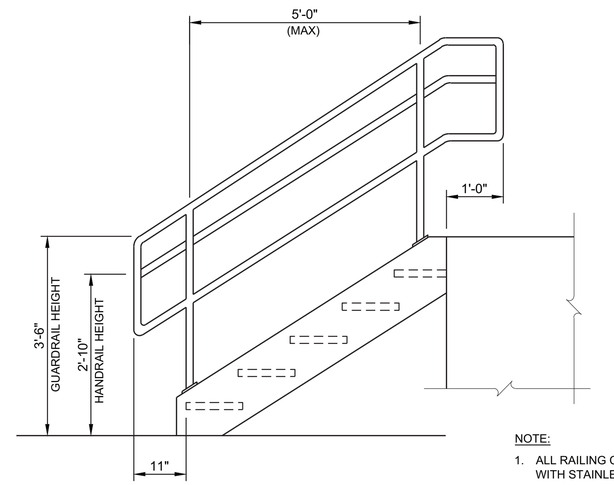

ELEVATION

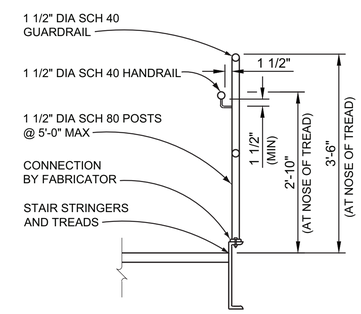

SECTION

NOTE:

1. ALL RAILING COMPONENTS TO BE ALUMINUM WITH STAINLESS STEEL HARDWARE.

GUARDRAIL AND HANDRAIL

NTS

5752

VERIFY SCALES	NO.	DATE	REVISION	BY	CHK.
BAR IS ONE INCH ON ORIGINAL DRAWING. 0" 1" IF NOT ONE INCH ON THIS DRAWING, ADJUST SCALES ACCORDINGLY.	1	12 / 2015	RECORD DRAWINGS		

DESIGNED BY: JMR
DRAWN BY: JFA
CHECKED BY: RJA
DATE: FEBRUARY 2015

Hatch Mott MacDonald

CITY OF LOUISVILLE, COLORADO
HOWARD BERRY
WATER TREATMENT PLANT
SOLIDS HANDLING IMPROVEMENTS

STRUCTURAL
STANDARD DETAILS

PROJECT NO. 336016
SHEET NO. D6
DWG. 39 OF 42

2/24/15 16:04 ARC56862 R19 P:\336016 - LOUISVILLE SOUTH WTP SOLIDS HANDLING\8-DETAILS\DX.DWG XREFS: P:\336016 - LOUISVILLE SOUTH WTP SOLIDS HANDLING\1-XREFX-TITLE.DWG;

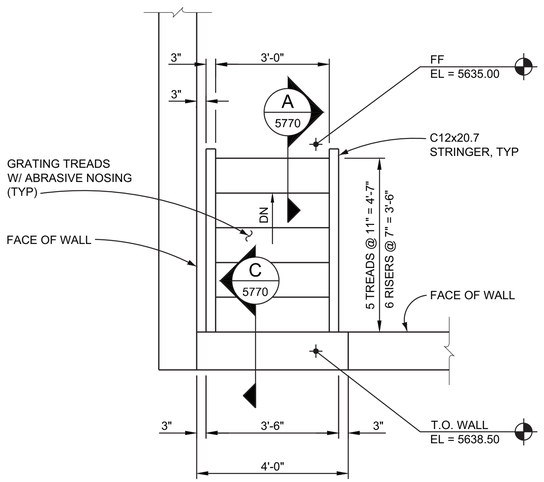

STAIR NOTES:

1. ALL COMPONENTS TO BE STEEL, HOT-DIP GALVANIZED AFTER FABRICATION.
2. ALL BOLTS TO BE STAINLESS STEEL.
3. GRATING AND TREADS SHALL BE CAPABLE OF SUPPORTING 100 PSF OR A 300 LB CONCENTRATED LOAD ON 4 SQ INCHES WITH LESS THAN 1/4" DEFLECTION.
4. HANDRAIL NOT SHOWN FOR CLARITY, CONTRACTOR TO DESIGN, FABRICATE, AND INSTALL PER SPECIFICATIONS.
5. ATTACH TREADS TO FRAMING PER MANUFACTURERS RECOMMENDATIONS.

STAIR PLAN

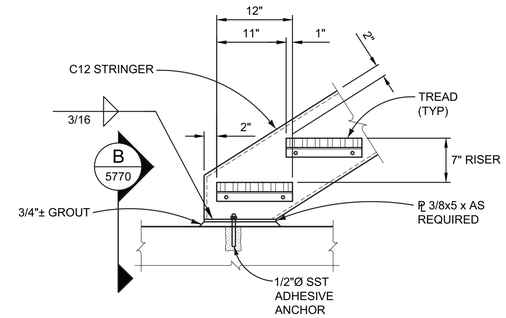

SECTION A 5770
SCALE: 1" = 1'-0"

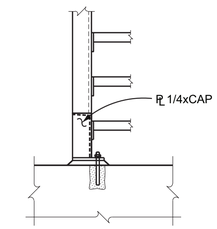

SECTION B 5770
SCALE: 1" = 1'-0"

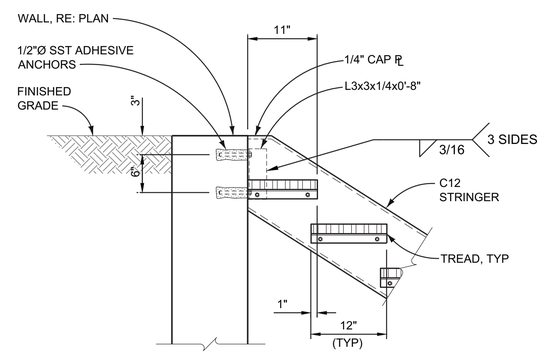

SECTION C 5770
SCALE: 1" = 1'-0"

METAL STAIR 5770
NTS

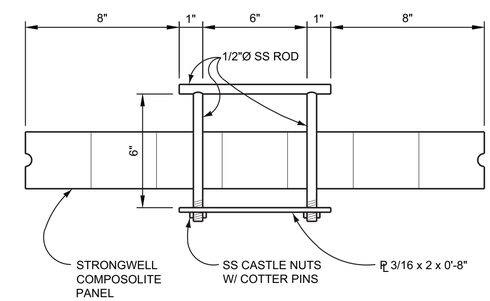

NOTE:

1. LOCATE HANDLES 6" FROM EACH END OF EACH PANEL.

PANEL HANDLES 6604

"THESE RECORD DRAWINGS HAVE BEEN PREPARED BASED ON INFORMATION PROVIDED BY OTHERS. THE ENGINEER HAS NOT VERIFIED THE ACCURACY OF THIS INFORMATION AND SHALL NOT BE RESPONSIBLE FOR ANY ERRORS OR OMISSIONS WHICH MAY BE INCORPORATED HEREIN AS A RESULT."

VERIFY SCALES
BAR IS ONE INCH ON ORIGINAL DRAWING.
0" 1"
IF NOT ONE INCH ON THIS DRAWING, ADJUST SCALES ACCORDINGLY.

NO.	DATE	REVISION	BY	CHK.
1	12 / 2015	RECORD DRAWINGS		

DESIGNED BY: JMR
DRAWN BY: JFA
CHECKED BY: RJA
DATE: FEBRUARY 2015

Hatch Mott MacDonald

CITY OF LOUISVILLE, COLORADO
HOWARD BERRY
WATER TREATMENT PLANT
SOLIDS HANDLING IMPROVEMENTS

STRUCTURAL
STANDARD DETAILS

PROJECT NO. 336016
SHEET NO. D7
DWG. 40 OF 42

2/24/15 16:04 ARC58862 R19 P:\336016 - LOUISVILLE SOUTH WTP SOLIDS HANDLING\8-DETAILS\DX.DWG XREFS: P:\336016 - LOUISVILLE SOUTH WTP SOLIDS HANDLING\1-XREF\X-TITLE.DWG;

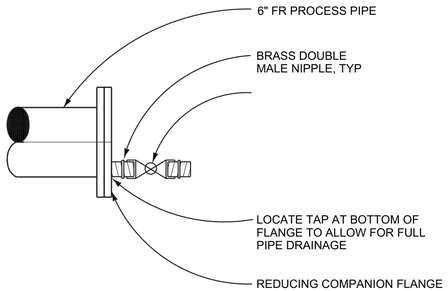

DRAIN
NTS

15110

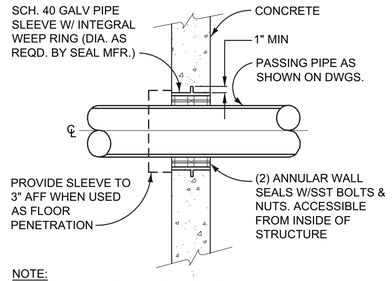

NOTE:
WHEN WALL/FLOOR IS EXISTING, CORE DRILL (SIZE AS REQD. BY SEAL MFR) AND PROVIDE TWO ANNULAR SEALS W/ SST BOLTS AND NUTS AS SHOWN ABOVE.

TYPE "A"

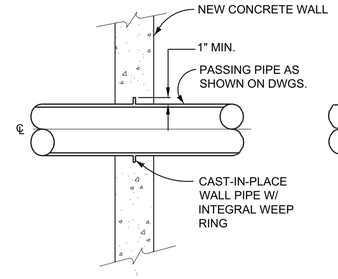

TYPE "B"

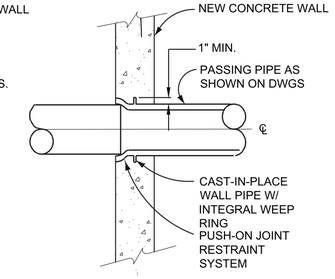

TYPE "C"

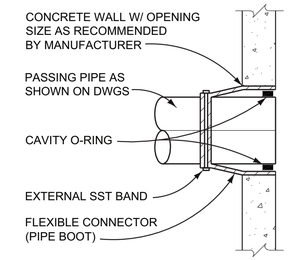

TYPE "D"

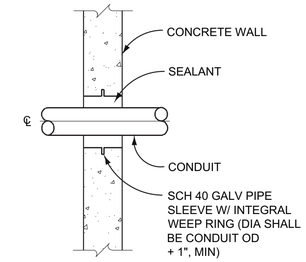

TYPE "E"

GENERAL NOTES FOR ALL TYPES :

1. PENETRATIONS SHALL CONFORM TO THE PENETRATION TABLE FOR THE CONDITION INDICATED, UNLESS OTHERWISE NOTED ON THE DRAWINGS.
2. COAT ALL REBAR AND STEEL EXPOSED FROM CORE DRILLING WITH EPOXY.
3. COAT EMBEDDED WALL AND FLOOR PIPES WITH APPROPRIATE PAINT SYSTEM PRIOR TO CONCRETE PLACEMENT.
4. DO NOT ALLOW PIPE SLEEVES TO COME IN CONTACT W/ REINFORCING STEEL.
5. ALL HARDWARE IN SUBMERGED OR WET AREAS SHALL BE SST.
6. ALL EXTERIOR PENETRATIONS SHALL HAVE 2 (MIN) FLEXIBLE CONNECTIONS AT 2 FEET AND 6 FEET FROM BUILDING FACE. SEE DET 15015
7. ANNULAR WALL SEALS: - UNLESS NOTED OTHERWISE,PROVIDE LINK-SEAL TYPE M OR EQUAL. - WHERE NOTED OR FOR SERVICES WHERE FLUID TEMPERATURE EXCEEDS 250 DEG F, PROVIDE LINK-SEAL TYPE F OR EQUAL.
8. UNLESS OTHERWISE SHOWN, ALL ANNULAR SPACES BETWEEN PASSING PIPE AND SLEEVES SHALL BE SEALED AS FOLLOWS:
   - A. ANNULAR SPACES IN PENETRATIONS OF FIRE RATED WALLS SHALL MEET FIRE CODE REQUIREMENTS OF APPLICABLE LOCAL AND STATE JURISDICTIONS.
   - B. FOUNDATION FLOOR SEALS SHALL BE SEALED WITH NONSHRINK GROUT. WRAP PIPE WITH POLYETHYLENE BAGGING INSIDE SLEEVE.
   - C. INTERIOR WALLS BETWEEN HEATED AND UNHEATED SPACES SHALL BE SEALED WITH RUBBER SEALANT AND BACKER ROD.
9. SEE SPECIFICATIONS FOR ADDITIONAL REQUIREMENTS.

PENETRATION TABLE

LOCATION	CONSTRUCTION	MEDIA	TYPE ABOVE GRADE	TYPE BELOW GRADE
BUILDING WALLS (DRY)	CONCRETE	PIPES	A,B,C,G	A,B,C
INTERIOR WALLS		DUCT	F,G	-
EXTERIOR WALLS		CONDUIT	E,G,	B,E
CEILING, SUSPENDED CEILING	CMU	ALL	G	-
TANK WALLS, FLOOR WATER HOLDING	CONCRETE	PIPES	A,B,C	A,B,C
VAULTS (DRY)	CONCRETE	PIPES	-	A,B,C,D
		CONDUIT	-	B,D,E
MANHOLES	CONCRETE	PIPES	-	A,B,D
		CONDUITS	-	B,D,E
SLAB ON GRADE	CONCRETE	PIPES	-	A,B,C
		CONDUITS	-	A,B,E

OPENING AND PENETRATIONS
NTS

15005

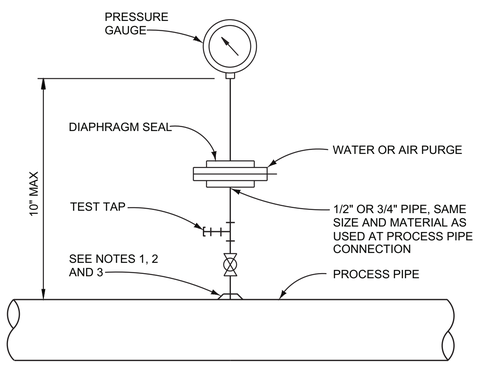

NOTES:

1. FOR STEEL, GALVANIZED STEEL, AND PVC 2 1/2" AND SMALLER USE A BUSHING IN A TEE.
2. FOR DUCTILE IRON AND FIBERGLASS REINFORCED PLASTIC PIPE, ALL SIZES, USE PIPE SADDLE WITH BUSHING.
3. FOR STEEL AND STAINLESS STEEL PIPES 3" AND LARGER, AND PRESSURE VESSELS, USE THRED-O-LET AS SHOWN.

PRESSURE GAUGE-TYPE A
NTS

15130

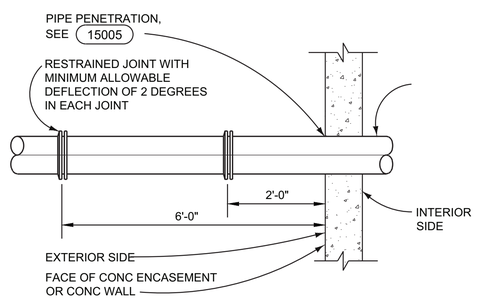

DIP OR PVC PIPE EXTERIOR @ STRUCTURE

NOTE:
UNDERGROUND ASSEMBLIES SHALL BE WRAPPED W/ 8 MIL. POLYETHYLENE

FLEXIBLE JOINT
NTS

15015

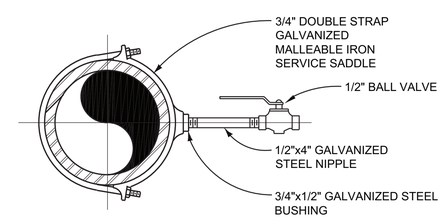

SAMPLE TAP
NTS

15115

"THESE RECORD DRAWINGS HAVE BEEN PREPARED BASED ON INFORMATION PROVIDED BY OTHERS. THE ENGINEER HAS NOT VERIFIED THE ACCURACY OF THIS INFORMATION AND SHALL NOT BE RESPONSIBLE FOR ANY ERRORS OR OMISSIONS WHICH MAY BE INCORPORATED HEREIN AS A RESULT."

VERIFY SCALES
BAR IS ONE INCH ON ORIGINAL DRAWING.
0" 1"
IF NOT ONE INCH ON THIS DRAWING, ADJUST SCALES ACCORDINGLY.

NO.	DATE	REVISION	BY	CHK.
1	12 / 2015	RECORD DRAWINGS		

DESIGNED BY: RJA
DRAWN BY: JFA
CHECKED BY: RJA
DATE: FEBRUARY 2015

Hatch Mott MacDonald

CITY OF LOUISVILLE, COLORADO
HOWARD BERRY
WATER TREATMENT PLANT
SOLIDS HANDLING IMPROVEMENTS

PROCESS DETAILS

PROJECT NO. 336016
SHEET NO. D8
DWG. 41 OF 42

2/24/15 16:04 ARC56862 R19 P:\336016 - LOUISVILLE SOUTH WTP SOLIDS HANDLING\8-DETAILS\DX.DWG XREFS: P:\336016 - LOUISVILLE SOUTH WTP SOLIDS HANDLING\1-XREF\X-TITLE.DWG;

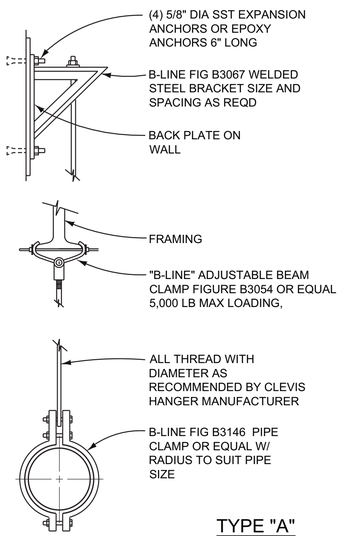

TYPE "A"

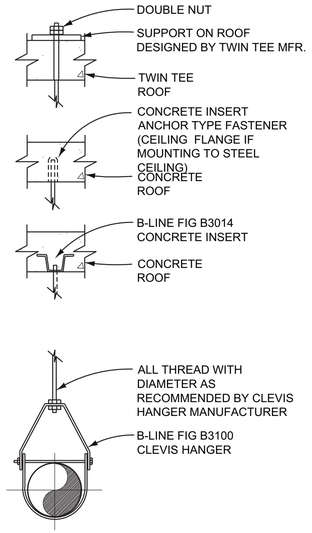

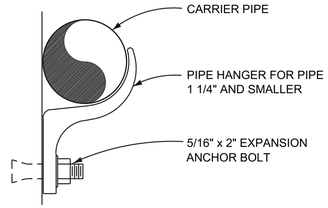

TYPE "B"

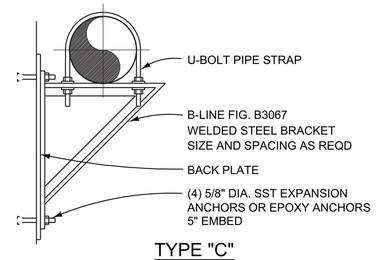

TYPE "C"

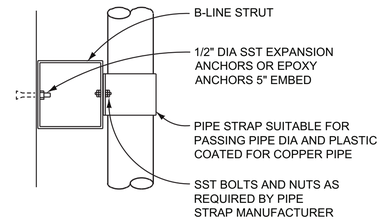

TYPE "D"

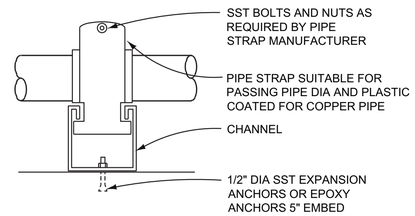

TYPE "E"

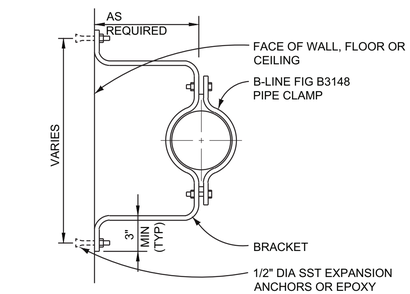

TYPE "F"

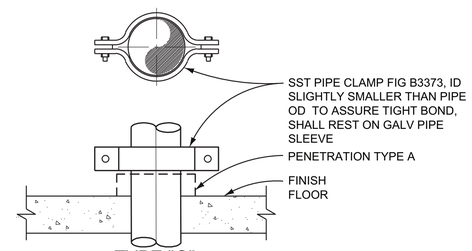

TYPE "G"

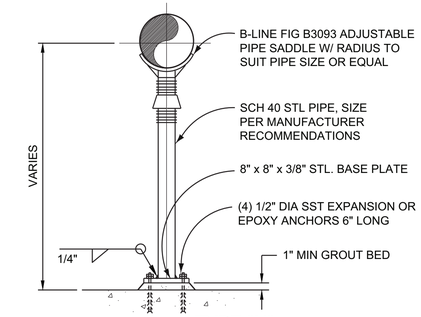

TYPE "H"

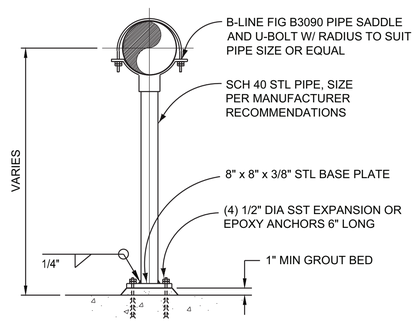

TYPE "J"

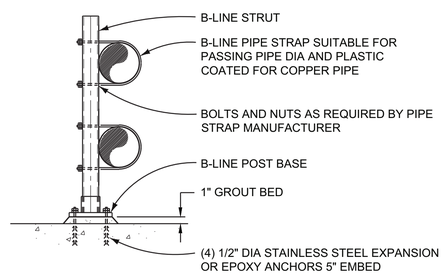

TYPE "K"

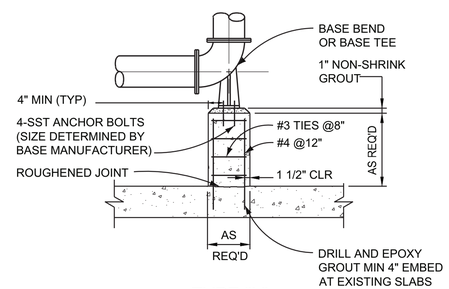

TYPE "L"

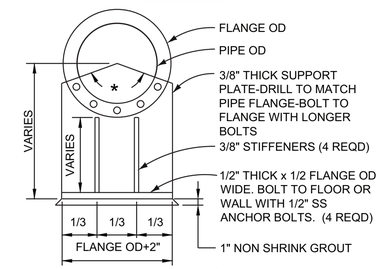

TYPE "M"

* NOTE:
REQ PER BOLT DRILLING PATTERN.

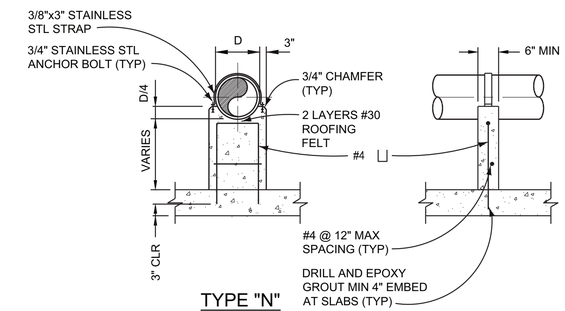

TYPE "N"

GENERAL NOTES FOR ALL TYPES :

1. PROVIDE STAINLESS STEEL PIPE SUPPORTS AND HARDWARE IN ALL SUBMERGED OR WET AREAS UNLESS NOTED OTHERWISE.
2. ALL PIPE SUPPORT SYSTEMS (EXCEPT STAINLESS STEEL) SHALL BE PAINTED TO MATCH COLOR OF PIPE.
3. ONLY WITH PRIOR APPROVAL FROM ENGINEER SHALL THE CONTRACTOR MAKE MODIFICATIONS TO THESE SUPPORTS.
4. PROVIDE PROPER MEANS TO ASSURE THAT NO DISSIMILAR METALS ARE IN DIRECT CONTACT WITH ONE ANOTHER.
5. REFERENCE CONTRACT SPECIFICATIONS AND MFR. LITERATURE FOR ADDITIONAL REQUIREMENTS.
6. PROVIDE HALF ROUND RIGID INSULATION, INSULATION PROTECTION SHIELD, AND OVERSIZED SUPPORT WHERE PIPING IS INSULATED.
7. PROVIDE NEOPRENE WAFFLE INSULATION PAD UNDER SUPPORT FOOT WHEN PIPING IS ISOLATED OR SUPPORT IS ADJACENT TO MECHANICAL EQUIPMENT.
8. ATTACH TO SURFACE WITH APPROPRIATE ANCHOR. WHERE BACKING PLATE IS REQUIRED, PROVIDE 2 SST BOLTS W/ NUTS AND FLAT WASHERS TO SUIT LOAD.
9. SIZE ALL ALL-THREAD/TIE-RODS BASED ON MANUFACTURER RECOMMENDATIONS.
10. PRIOR TO INSTALLATION, VERIFY SUPPORTS USED ARE LOAD RATED TO THE REQUIRED SAFETY FACTOR.
11. CONTRACTOR SHALL VERIFY AND USE CORRECT HANGER FOR PIPE MATERIAL BEING SUPPORTED.
12. ALL SUPPORTS ON THIS SHEET REFERENCE "B-LINE". GRINNELL, BASIC ENGINEERS, UNISTRUT MAY ALSO BE USED IF SUBMITTED AS AN "OR EQUAL".
13. STRUTS AND CHANNELS SHALL BE FIBERGLASS, SST, OR HEAVILY EPOXY COATED.

SCHEDULE D

TRAPEZE SUPPORT (DIM. IN INCHES)

PIPE SIZE	STEEL TUBE SUPPORT BEAM VERT.xHOR.	MINIMUM ROD Ø (INCHES)		WASHER PLATE	BASE PLATE			WELD	EXP. ANCHOR DIA. x LENGTH	MAX. SUPPORT SPACING IN FEET (SEE NOTE 8)	
		PROCESS PIPING	STEEL AIR PIPING		A	B	C	D		PROCESS PIPING	STEEL AIR PIPING
12-14	4x4x3/8	1/2	1/2	4x4x1/4	1	10	3/8	3/16	1/2 x 4	10	15
16-24	4x4x3/8	3/4	5/8	4x4x3/8	1	10	1/2	3/16	5/8 x 5	10	15
30-36	6x4x3/8	1	3/4	4x4x1/2	2	12	1/2	1/4	3/4 x 6	10	20
42	6x4x3/8	1 1/4	3/4	5x5x1/2	2	12	3/4	1/4	7/8 X 6	10	25
48	8x4x3/8	1 1/2	1	5x5x3/4	2	12	1	1/4	1 X 7	10	30

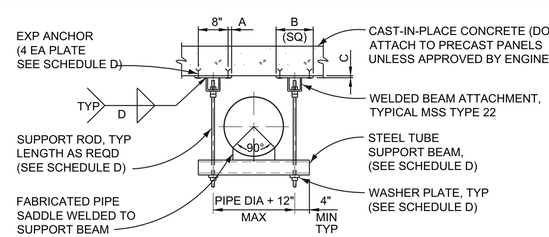

TYPE "P"

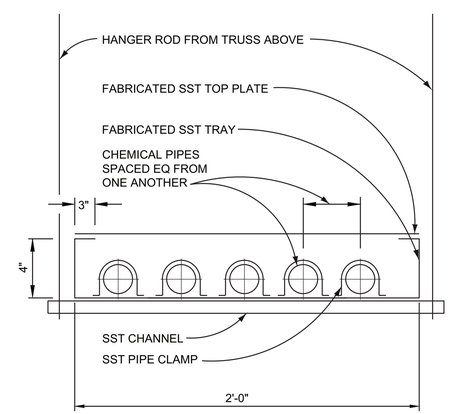

FABRICATED CHEMICAL TRAY

TYPE "R"

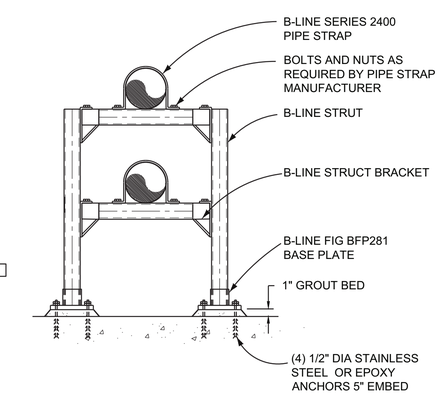

TYPE "S"

"THESE RECORD DRAWINGS HAVE BEEN PREPARED BASED ON INFORMATION PROVIDED BY OTHERS. THE ENGINEER HAS NOT VERIFIED THE ACCURACY OF THIS INFORMATION AND SHALL NOT BE RESPONSIBLE FOR ANY ERRORS OR OMISSIONS WHICH MAY BE INCORPORATED HEREIN AS A RESULT."

PIPE SUPPORTS-TYPE A
NTS

15000

2/24/15 16:04 ARC56862 R19 P:\336016 - LOUISVILLE SOUTH WTP SOLIDS HANDLING\18-DETAILS\DX DWG XREFS: P:\336016 - LOUISVILLE SOUTH WTP SOLIDS HANDLING\1-XREF\X-TITLE.DWG;

VERIFY SCALES
BAR IS ONE INCH ON ORIGINAL DRAWING.
0" 1"
IF NOT ONE INCH ON THIS DRAWING, ADJUST SCALES ACCORDINGLY.

NO.	DATE	REVISION	BY	CHK.
1	12 / 2015	RECORD DRAWINGS		

DESIGNED BY: RJA
DRAWN BY: JFA
CHECKED BY: RJA
DATE: FEBRUARY 2015

Hatch Mott MacDonald

CITY OF LOUISVILLE, COLORADO
HOWARD BERRY
WATER TREATMENT PLANT
SOLIDS HANDLING IMPROVEMENTS

PROCESS DETAILS

PROJECT NO. 336016
SHEET NO. D9
DWG. 42 OF 42

Drying Beds
N Washington Ave
City of Louisville
Water Treatment Plant
sid copeland water
treatment plant